Hubbellock® Accessories

HBL20405

30 Amp Hubbellock® Accessories

Receptacle Plates for FS/FD Box Mounting

Description	Catalog Number
Thermoplastic, wet and damp locations with cover “open”, gray.	**HBL7428WOG***
Thermoplastic, wet and damp locations with cover “open”, yellow.	**HBL7428WOY***
Thermoplastic, wet and damp locations with cover “open”, red.	**HBL7428WOR***
Cast aluminum, wet location only when cover “closed” and damp locations, lift cover plate.	**HBL20405**
Cast aluminum, wet location only when cover “closed” and damp locations, red finish.	**HBL20446**
302/304 stainless, single gang, smooth. NOT weatherproof.	**SS737**

*Note: *Features two #6-32 threaded inserts to back mount device to cover.*

SEHBL3

Switched Enclosure

IP54
SUITABILITY

Description	Catalog Number
Switched enclosure for use with 30A 3 pole 4 wire Hubbellock receptacle. Receptacle not included.	**SEHBL3**

Note: For more information on switched enclosures see page B-38.

Liquidtight Metallic Conduit Adapters

Description	Catalog Number
Adapter for use with ½" NPT conduit fittings.	**SAB12**
Adapter for use with ¾" NPT conduit fittings.	**SAB34**

SAB34

Boots

Description	Catalog Number
“Mini” boot for 4 wire Hubbellock connector body.	**HBL20424B†**
“Mini” boot for 4 wire Hubbellock plug.	**HBL20425B†**

Note: †Not UL Listed or CSA Certified.

HBL20424B

60 Amp Hubbellock® Accessories

Receptacle Box and Adapter Plates (Box requires one adapter)

Description	Catalog Number
Box, cast aluminum, only for 60A Hubbellock receptacles.	**HBL26401**
Straight adapter plate.	**HBL26402**
45° adapter plate.	**HBL26404**

Note: Straight or angle adapter plate must be used when mounting a 60A receptacle to HBL26401 box. Cannot be used with round flanged receptacles and inlets.

HBL20425B

Kellems® Cable Grip

Description	Cord Diameter	Catalog Number
Cable grip.	.830"-1.000" (21.1-25.4)	**H660A**
Cable grip (not shown).	1.000"-1.140" (25.4-28.9)	**H661A**
Cable grip (not shown).	1.125"-1.328 (28.6-33.7)	**H662A**

H660A

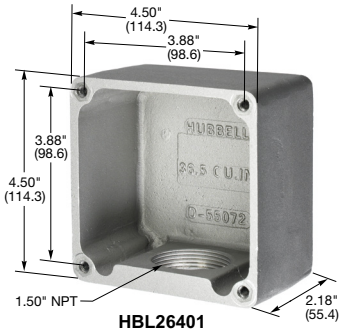

HBL26401

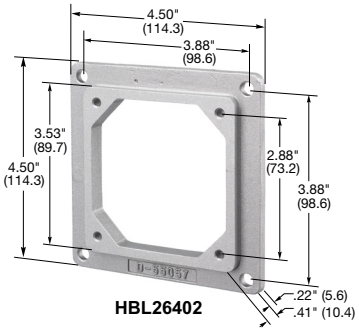

HBL26402

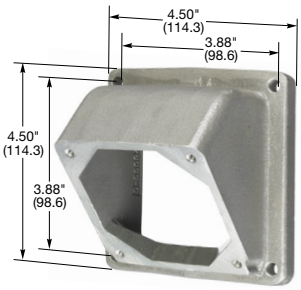

HBL26404

Dimensions in Inches (mm)