60 Amp, 600 Volts AC

Connector Bodies

IP30
SUITABILITY

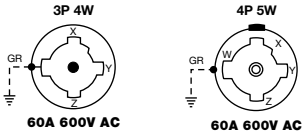

Description	Cord Dia.	Catalog Number	
Black phenolic interior with yellow thermoplastic sleeve over steel cover.	.920"-1.450" (23.36-36.83)	**HBL26418**	–
Black phenolic interior with blue thermoplastic sleeve over steel cover.	1.00"-1.50" (25.40-38.10)	–	**HBL26516**

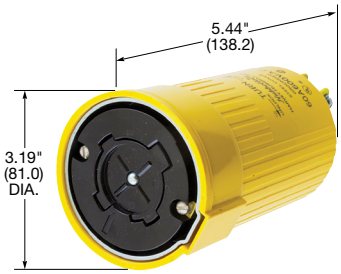

HBL26418

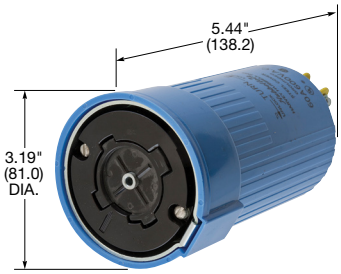

HBL26516

Receptacles

IP44
SUITABILITY

Description	Catalog Number	
Black phenolic interior with short aluminum housing and lift cover.	**HBL26410**	–
Black phenolic interior with long aluminum housing and lift cover.	**HBL26420**	–
Black phenolic interior with long aluminum housing with lift cover and blue finish.	–	**HBL26520**

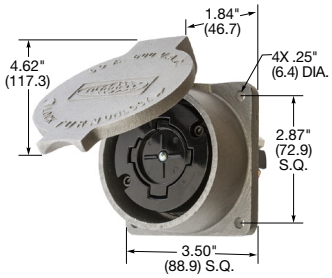

HBL26410

Flanged Receptacles

IP30
SUITABILITY

Description	Catalog Number	
Black phenolic interior with steel housing and flange.	**HBL26421**	–
Black phenolic interior with steel housing and flange with blue finish.	–	**HBL26521**

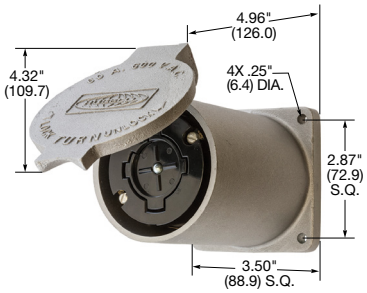

HBL26420

Receptacle Box and Adapter Plates (Box requires one adapter)

Description	Catalog Number
Box, cast aluminum, only for 60A Hubbellock receptacles.	**HBL26401**
Straight adapter plate.	**HBL26402**
45° adapter plate.	**HBL26404**

Note: Straight or angle adapter plate must be used when mounting a 60A receptacle to HBL26401 box.
Cannot be used with round flanged receptacles and inlets.
See page B-68 for additional information.

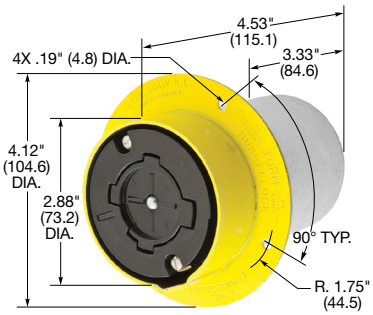

HBL26421

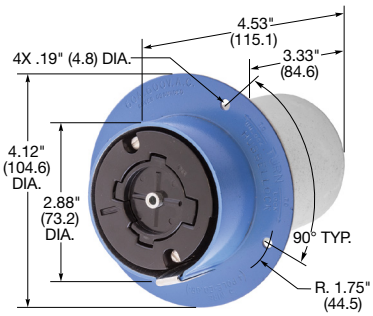

HBL26521

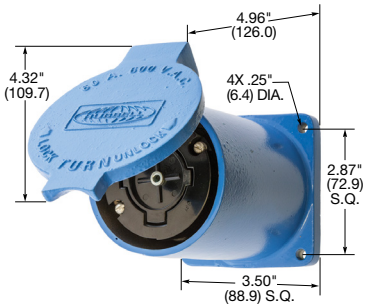

HBL26520

Dimensions in Inches (mm)