20 Amp, 3ØY 120/208, 277/480 and 347/600 Volts AC
4 Pole, 5 Wire, Grounding

Connector Bodies

Watertight Safety-Shroud®

IP66 SUITABILITY — UL Type 4x, 12

Description	Cord Dia.	20A 3ØY 120/208V AC NEMA L21-20R 2 HP	20A 3ØY 277/480V AC NEMA L22-20R 5 HP	20A 3ØY 347/600V AC NEMA L23-20R
Black Valox® housing, white Valox® clamps.	.350"-1.150" (9-29)	**HBL2513SW**	–	–

Insulgrip®

IP20 SUITABILITY

Description	Cord Dia.	20A 3ØY 120/208V AC NEMA L21-20R 2 HP	20A 3ØY 277/480V AC NEMA L22-20R 5 HP	20A 3ØY 347/600V AC NEMA L23-20R
Black and white nylon.	.350"-1.150" (9-29)	**HBL2513**	**HBL2523**	**HBL2533**
Black and white nylon, spring termination	.350"-1.150" (9-29)	**HBL2513ST**	**HBL2523ST**	–
Spring termination, all black		**HBL2513STBK**	–	–
All black nylon.	.350"-1.150" (9-29)	**HBL2513BK**	–	–
Corrosion resistant, yellow nylon.	.350"-1.150" (9-29)	**HBL25CM13**	–	–
Black and white for flat cable.	.350"-1.150" (9-29)	**HBL2513FC**	–	–

Note: See page B-52 for accessories.

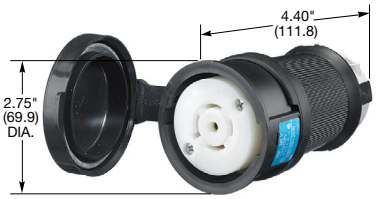

HBL2513SW

HBL2513

HBL2513ST

Receptacles

Watertight Safety-Shroud®

IP66 SUITABILITY — UL Type 4x, 12

Description	Catalog Number		
Gray Valox® housing and flange, back wired.	**HBL2510SW**	–	–

Note: See page B-54 for accessories.

Safety-Shroud® Twist-Lock®

IP20 SUITABILITY

Description	Catalog Number		
Gray Valox® angle housing, one gang, back wired.	**HBL2510AR**	–	–
Gray Valox® surface mounting, one gang, back wired.	**HBL2510SR**	–	–
Gray Valox® semi-flush, two gang, back wired.	**HBL2510SR2**	–	–

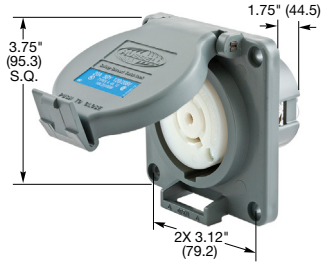

HBL2510SW

Single Flush Receptacles

IP20 SUITABILITY

Description	Catalog Number		
Black nylon face, back and side wired.	**HBL2510**	**HBL2520***	**HBL2530***
Black and white nylon, spring termination.	**HBL2510ST**	**HBL2520ST**	–
Isolated ground, orange nylon face, back and side wired.	**IG2510**	–	–

Note: See page B-52 for accessories.
**Not Fed Spec.*

Insulgrip® Flanged Receptacles

Description	Catalog Number		
Nylon casing, back wired.	**HBL2516**	**HBL2526**	**HBL2536**
Nylon casing, back wire, spring termination	**HBL2516ST**	**HBL2526ST**	–
Black nylon casing, back wire, spring termination	**HBL2516STBK**	–	–

Note: See page B-52 for accessories.

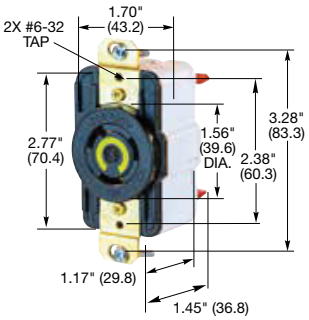

HBL2520ST

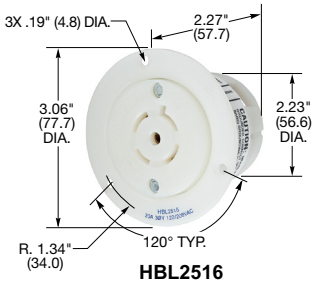

HBL2516

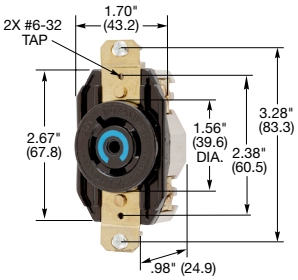

HBL2510

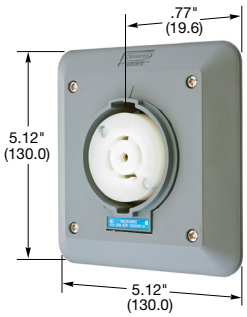

HBL2510SR2

HBL2510SR

Valox® is a trademark of SABIC Innovative Plastics, acquired from General Electric Company.

Dimensions in Inches (mm)