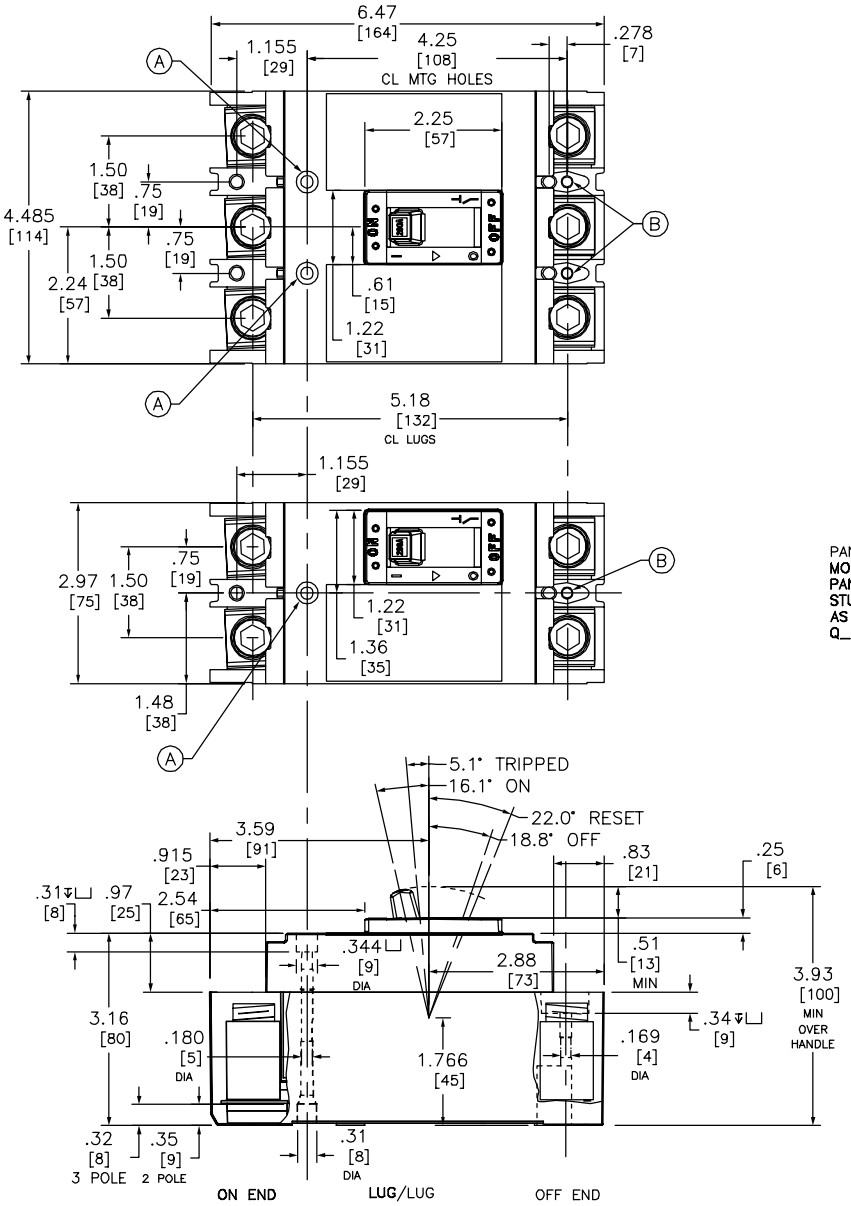

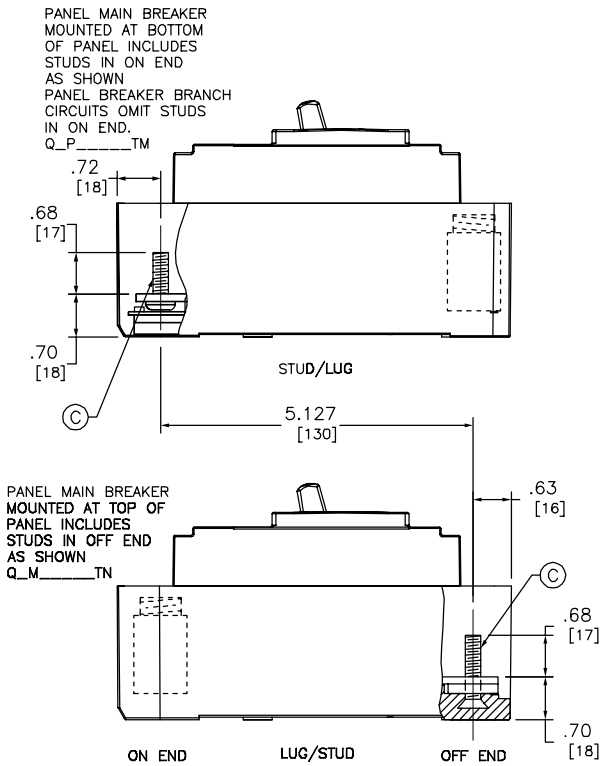

(A) MOUNTING HOLES FOR MOUNTING SCREW 48920-012-02 8-32 x 3.062 UNC

(B) MOUNTING HOLES FOR MOUNTING SCREW 48920-012-01 8-32 x 2.062 UNC

(C) STUD IS 1/4-20 UNC

BREAKER MOUNTING TYPES:

Q_L22070 THROUGH Q_L32250: FLAT PAN MOUNTED, LUGS BOTH ENDS.
Q_P22070 THROUGH Q_P32250: FLAT PAN MOUNTED, LUGS OFF END, LINE TERMINAL TAPPED (NO STUDS) ON END.
Q_M22070TN THROUGH Q_M32250TN: FLAT PAN MOUNTED, LUGS ON END, STUDS OFF END, MOUNTED AT TOP OF PANEL.
Q_P22070TM THROUGH Q_P32250TM: FLAT PAN MOUNTED, STUDS ON END, LUGS OFF END, MOUNTED AT BOTTOM OF PANEL.
Q-F22070TS THROUGH Q-F32250TS: FLAT PAN MOUNTED, STUDS BOTH ENDS.
Q-P22070TP THROUGH Q-P32250TP: FLAT PAN MOUNTED, LUGS OFF END, STUDS ON END (NO NUT/WASHER).

DUAL DIMENSIONS: INCHES [MILLIMETERS]

POWERPACT 250AMP
Q-FRAME
UNIT MOUNT
2 AND 3 POLE
MOLDED CASE CIRCUIT BREAKERS

SQUARE D
Schneider Electric

DWG# NO. 48996-020-01

NOVEMBER 2003

WAS 48096-015-01