Product Datasheet

ANDERSON FARGO

GP2093P90 -- Fargo Lineman's Wrench

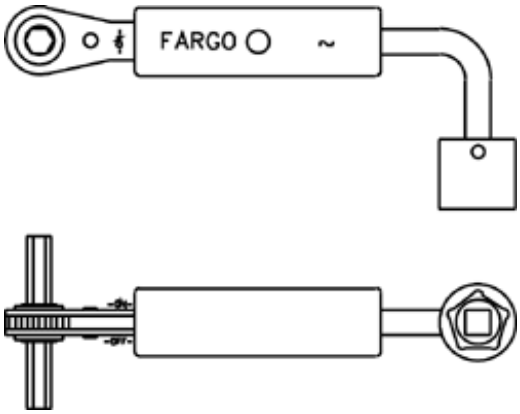

Fargo Lineman's Wrench, 5/16" Allen Ratchet and 90 Penta Socket

Product Specifications

Series	GP Series Hand "Speed" Wrenches for installing bolted and mechanical connectors
PDF Catalog Page	Click HERE to view the web page.
End A Type	Allen Ratchet - 5/16" x 1.46" long
End B Type	90 degree Penta Socket
End A Size	5/16"
End "A" Dimension C	1.46" (37 mm)
End "B" Dimension C	2.50" (64 mm)
Dimension L	9.25" (235 mm)
Material Type	Standard
UPC Code	09635931267
Standard Package	5
Standard Package Unit	Each
Min Order Qty	1
Weight / Ea.	0.862 lbs

Notes

Specifically constructed for proper and fast installation of mechanical connectors.

Features

Sturdy polypropylene handle provides protection from incidental contact.

Compressed Product Number
GP2093P90

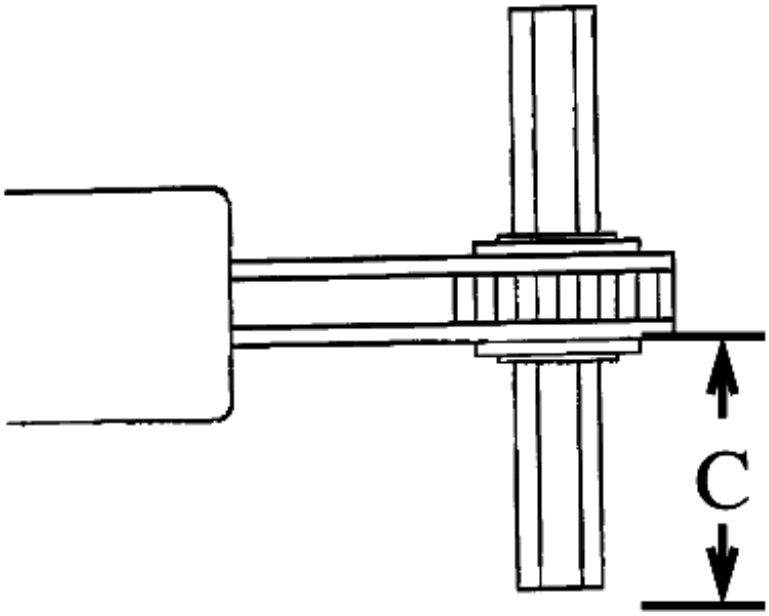

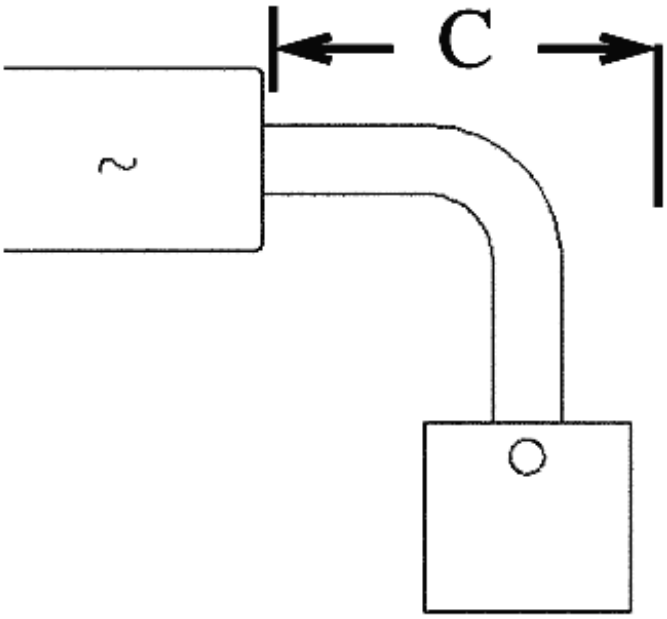

Catalog Home

Warranty Info | Trademarks | Terms of Use

All contents Copyright © 2007 Hubbell Power Systems, Inc. All rights reserved.

NOTE: Because Hubbell has a policy of continuous product improvement, we reserve the right to change design and specifications without notice.