PowerPact® D-Frame Circuit Breakers and Switches

150 to 600 A

Catalog
0616CT0801

2010

Class 0616

CONTENTS

Description . . . . . Page

General Information 7
Electronic Trip Units and Test Kits 17
Circuit Breakers 24
Mission Critical Circuit Breakers. 26
Automatic Switches 28
Motor Circuit Protectors 30
Circuit Breaker Mounting and Connections 31
Accessories 36
Wiring Diagrams. 47
Dimensions. 49
Trip Curves. 61

SQUARE D

by Schneider Electric

© 2007—2010 Schneider Electric
All Rights Reserved

SECTION 1: GENERAL INFORMATION 7

Introduction 7
Features and Benefits 7
Features 9
Circuit Breaker Ratings 9
Interrupting Rating 9
Ampere Rating (Continuous Current Rating) 9
Standard and 100% Ratings 10
Trip System 10
Enclosed Breaking System 10
Dual-Break Rotating Contacts 10
Reduced Let-Through Currents 11
Piston Assist of Tripping 11
Internal Operating Mechanism 11
Push-to-Trip Button 11
Low Let-Through Current 12
Operating Conditions 12
Temperature 12
Enclosures 13
Altitude 13
Storage Temperature 13
Extreme Atmospheric Conditions 13
Vibration 13
Codes and Standards 14
Specifications of Marine Classification Organizations 14
Pollution Degree 14
Environmental Protection 14
Suitability for Isolation (Positive Contact Indication) 14
Testing Requirements 15
UL, NEMA and CSA requirements 15
IEC Requirements 16

SECTION 2: ELECTRONIC TRIP UNITS AND TEST KITS 17

Trip Units for PowerPact® D-Frame Circuit Breakers 17
Electronic Trip Unit STR23SP and SR23SP-OSN (Oversized Neutral) 19
Protection 19
Indications 19
Test 19
Setting Example 19
Electronic Trip Unit STR53UP 20
Protection 20
Overload Indications (%Ir) 20
Fault Indications 20
Test 21
Self-Monitoring 21
Options for Electronic Trip Unit STR53UP 21
Equipment Ground-fault Protection 21
Ammeter (I) 21
Zone-Selective Interlocking (ZSI) with STR53 Trip Unit 21
Optical Outputs 21
External Neutral Current Transformers (CT) 22
Electronic Trip Unit Test Kits 22
Mini Test Kit (43362) and Hand-Held Test Kit (S33594) 22
Portable Test Kit (55391) 22
Full-Function Test Kit (S33595) 23

© 2007–2010 Schneider Electric
All Rights Reserved

SECTION 3: CIRCUIT BREAKERS 24

Introduction 24
Ratings and Interrupting Ratings 24

SECTION 4: MISSION CRITICAL CIRCUIT BREAKERS 26

Theory of Operation 27

SECTION 5: AUTOMATIC SWITCHES 28

SECTION 6: MOTOR CIRCUIT PROTECTORS 30

Motor Circuit Protectors 30

SECTION 7: CIRCUIT BREAKER MOUNTING AND CONNECTIONS 31

Mounting Configurations 31
Fixed Mounting 31
I-Line® Circuit breakers 31
Plug-In Mounting 32
Drawout Mounting 32
Plug-In Mounting and Drawout Mounting 33
Connection 34
Front Connection 34
Compression (Crimp) lugs - future 34
Bus Bar Connection 35
Rear Connection 35
Interphase Barriers 35

SECTION 8: ACCESSORIES 36

Electrical Accessories General Information 36
Location 36
Connections 36
Auxiliary and Alarm Switches 37
Shunt Trip (MX) and Undervoltage Trip (MN) Switches 38
Motor Operator 39
Rotary Operating Handles 40
Directly Mounted Rotary Operating Handles 40
NEMA Door Mounted Rotary Operating Handles (Not Shown) 41
Class 9422 Cable Operating Handle 42
Class 9422 Flange-Mounted Variable-Depth Operating Mechanism 42
Handle Extension 42
Locking Systems 43
Interlocking Accessories 43
Interlocking Circuit Breakers with Padlocks 43
Interlocking with Keys 44
Sealing Accessory 44
Order kit number. 44
Front-Panel Escutcheons 45
For Fixed or Plug-In Mounting 45
Handle Extensions 45
Toggle Boot 45
Toggle Collars (For Drawout Mounting) 46
Outgoing Circuit Identification 46

© 2007–2010 Schneider Electric
All Rights Reserved

SECTION 9: WIRING DIAGRAMS 47

Circuit Breaker Wiring Diagrams 47
Standard Motor Operator Wiring (Factory Wiring Configuration) 47
Remote Reset Wiring Without Overcurrent Trip Switch Protection 48

SECTION 10: DIMENSIONS 49

Fixed Mounted Circuit Breakers 49
Mounting 49
Front Panel Cutouts for Fixed or Plug-In Circuit Breakers 50
Front Panel Cutouts for Toggle Boot and Escutcheon 50
Plug-In and Drawout Mounting 51
Plug-In (On Base) 51
Drawout (On Chassis) 51
Mounting Through a Backplate 52
Mounting on Rails (Plug-In Base or Chassis) 52
Front-Panel Cutouts 52
Motor Operators 53
Front-Panel Cutouts 53
Cable-Operating Handles 54
Rotary-Operating Handles 54
Front-Panel Cutouts 55
Motor-Control Center-Type Direct Rotary-Operating Handle 55
Mounting 56
Front-Panel Cutout 56
Motor-Control Center-Type Direct Rotary-Operating Handle 57
Front Accessories 57
Extended Escutcheons 57
Front-Panel Escutcheons 57
Interlocking Systems 58
Interlocking Systems with Rotary-Operating Handles 58
Interlocking Systems with Toggle Handles 58
Connector Dimensions 59
Fixed-Mounted Connections 59
Front Connections 59
Rear Connections 59
Plug-In or Drawout Mounting Connections 60
Rear Connections Fitted at Lower Limit 60
Rear Connections Fitted at Upper Limit 60

SECTION 11: TRIP CURVES 61

Reflex Tripping 61
STR23SP Trip Curve 61
STR53UP Trip Curve 61
D-Frame Mission Critical 62
Let-Through Curves at 480 V 63
Maximum Peak Let-Through Current (A) 63
Maximum Let-Through I^2t (A^2s) 63
Let-Through Curves at 600 V 64
Maximum Peak Let-Through Current (A) 64
Maximum Let-Through I^2t (A^2s) 64
Current-Limiting Curves at 380/415 V 65
Maximum Peak Let-Through Current (A) 65
Maximum Let-Through I^2t (A^2s) 65
Current-Limiting Curves at 690 V 66

© 2007–2010 Schneider Electric
All Rights Reserved

Maximum Let-Through I^2t (A^2s) 66

CATALOG NUMBERS 67

© 2007–2010 Schneider Electric
All Rights Reserved

Section 1—General Information

Introduction

PowerPact® D-frame electronic trip molded case circuit breakers are designed to protect electrical systems from damage caused by overloads and short circuits. All circuit breakers are designed to open and close a circuit by nonautomatic means and to open the circuit automatically on a predetermined overcurrent. The D-frame circuit breakers use an electronic trip system to signal the circuit breaker to open automatically.

Table 1: D-Frame Circuit Breakers and Switches

	Circuit Breaker	Switches	Motor Circuit Protectors
Rated Current (A)	150–600 A	400 A, 600 A	400–600 A
Application	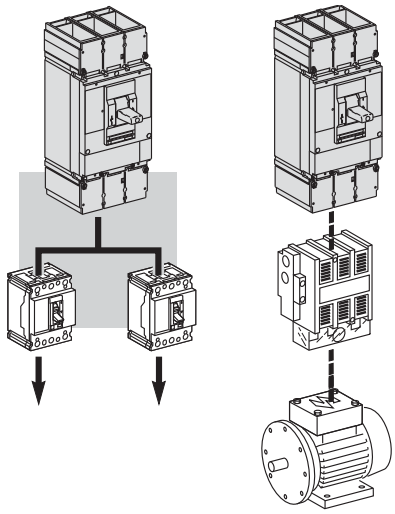		

For information on other PowerPact molded case circuit breakers manufactured by Square D®, see the Class 611 and 612 catalogs.

Features and Benefits

D-frame electronic trip circuit breakers:

- Provide overload and short-circuit protection
- Are true RMS sensing devices
- Provide means to manually disconnect power to the circuit
- Provide enhanced coordination by their adjustability
- Provide high interrupting ratings and withstand ratings
- Use many of the same accessories as other PowerPact circuit breakers
- Have a wide range of NEMA and IEC operating mechanisms

© 2007–2010 Schneider Electric
All Rights Reserved

Table 2: Catalog Numbering

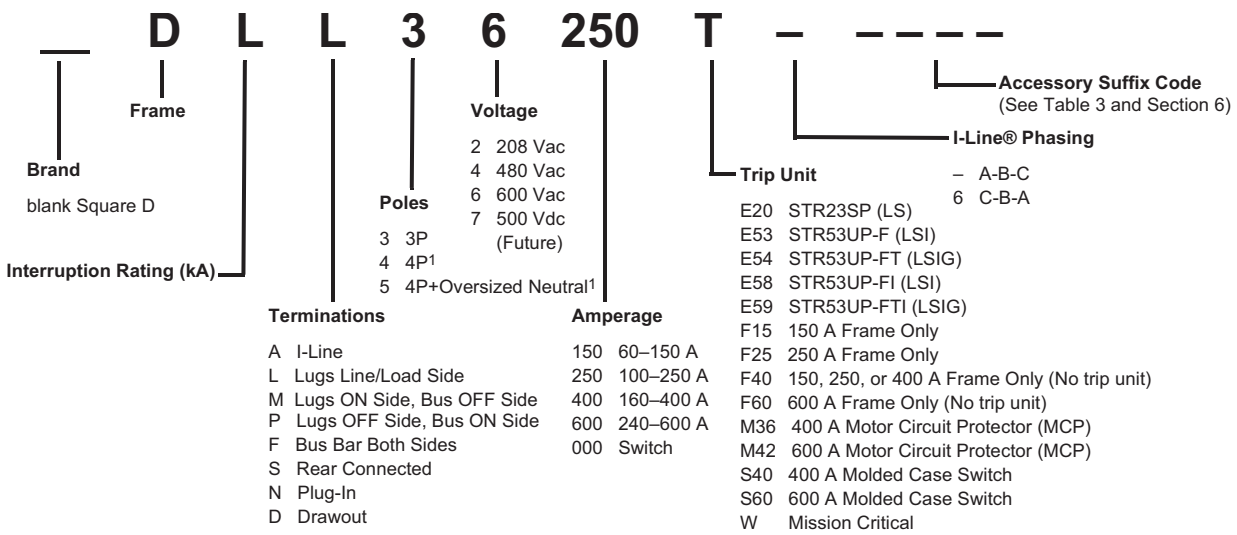

Interrupting Rating	UL/CSA/NOM			IEC 60947-2 Icu/Ics				
	240 Vac	480 Vac	600 Vac	220/240 Vac	380/440/415 Vac	500/525 Vac	250 Vdc	500 Vdc
G	65 kA	35 kA	18 kA	65/65 kA	35/35 kA	18/18 kA	20 kA	20 kA
J	100 kA	65 kA	25 kA	100/100 kA	65/65 kA	25/25 kA	20 kA	20 kA
L	125 kA	100 kA	25 kA	125/125 kA	100/100 kA	50/50 kA	20 kA	20 kA

[1] 4P circuit breaker available in plug-in, draw-out and rear-connected only. Availability of 4P bus-connected and lug configurations to be announced.

Table 3: Accessory Suffix Codes (Building Sequence as Listed)

(1) Auxiliary Switch

Suffix	Contacts	Kit No.
AA	1A/1B Standard	**S29450**
AB	2A/2B Standard	2x **S29450**
AE	1A/1B Low Level	**S29482**
AF	2A/2B Low Level	2x **S29482**

(2) Alarm/Overcurrent Trip Switch

Suffix	Switch	Kit No.
BC	Alarm Switch (SD)	**S29450**
BH	Alarm Switch (SD) Low-Level	**S29452**
BD	SDE Standard	**S29450**
BJ	SDE Low-Level	**S29452**
BE	SD and SDE Standard	2 **S29450**
BK	SD and SDE Low-Level	2 **S29452**

(3) Shunt Trip		Voltage	(4) Undervoltage Release UVR	
Suffix	Kit No.		Suffix	Kit No.
SK	**S29384**	24 Vac	UK	**S29404**
SL	**S29385**	48 Vac	UL	**S29405**
SA	**S29386**	120 Vac	UA	**S29406**
SD	**S29387**	208–277 Vac	UD	**S29407**
SH	**S29388**	380–480 Vac	UH	**S29408**
SJ	**S29389**	525–600 Vac	UJ	**S29409**
SN	**S29382**	12 Vdc	UN	**S29402**
SO	**S29390**	24 Vdc	UO	**S29410**
SU	**S29391**	30 Vdc	UU	**S29411**
SP	**S29392**	48 Vdc	UP	**S29412**
SV	**S29383**	60 Vdc	UV	**S29403**
SR	**S29393**	125 Vdc	UR	**S29413**
SS	**S29394**	250 Vdc	US	**S29414**

(5) Motor Operator

Suffix	Voltage	Kit No.
ML	48/60 Vac	**S32839**
MA	120 Vac	**S32840**
MD	277 Vac	**S32841**
MF	380/415 Vac	**S32845**
MH	440/480 Vac	**S32847**
MO	24/30 Vdc	**S32843**
MP	48/60 Vdc	**S32844**
MR	110/130 Vdc	**S32845**
MS	250 Vdc	**S32846**

(6) IEC Style Rotary Handle

Suffix	Handle Type (color)	Kit No.
RD12	Direct Mount (black)	**32597**
RE12	Extended Door Mount (black)	**32598**
RT12	Telescoping (black)	**32603**
RD22	Direct Mount (red)	**32599**
RE22	Extended Door Mount (red)	**32600**
—	MCC Conversion Accessory	**32606**

© 2007–2010 Schneider Electric
All Rights Reserved

Features

PowerPact electronic trip circuit breakers have a molded case made of a glass-reinforced insulating material (thermal set composite resin) that provides high dielectric strength. These circuit breakers:

- Are available in either dual-rated UL/IEC or IEC-only constructions
- Dual-rated UL/IEC circuit breakers are also CSA and ANCE certified
- Are manufactured in unit-mount, I-Line®, plug-in and drawout constructions
- Share common tripping of all poles
- Can be mounted and operated in any position
- Are available in motor circuit protector and automatic molded case switch constructions
- Can be reverse connected, without restrictive LINE and LOAD markings
- Meet the requirements of NEC® Sections 240-6 by providing a means to seal the rating plug and trip unit adjustments
- Have field-interchangeable trip units

Circuit Breaker Ratings

Interrupting Rating

The interrupting rating is the highest current at rated voltage which the circuit breaker is designed to safely interrupt under standard test conditions. Circuit breakers must be selected with interrupting ratings equal to or greater than the available short-circuit current at the point where the circuit breaker is applied to the system (unless it is a branch device in a series-rated combination). Interrupting ratings are shown on the front of the circuit breaker.

Table 4: UL/IEC Circuit Breaker Interrupting Ratings (See Table 20 for switch and Table 23 for motor circuit protection ratings.)

Circuit Breaker	UL/CSA Rating (60 Hz)			IEC 60947-2 Rating (50/60 Hz)			
				240 Vac		380/415 Vac	
	240 Vac	480 Vac	600 Vac	Icu	Ics	Icu	Ics
DG	65 kA	35 kA	18 kA	85 kA	85 kA	45 kA	45 kA
DJ	100 kA	65 kA	25 kA	100 kA	100 kA	70 kA	70 kA
DL	125 kA	100 kA	25 kA	150 kA	150 kA	150 kA	150 kA

Ampere Rating (Continuous Current Rating)

The ampere rating (or continuous current rating) (Ir) is the maximum current that a circuit breaker can carry. The sensor size (In) is the maximum ampere rating for a specific circuit breaker and is based on the size of the sensor inside the circuit breaker (sensors are an integral part of the D-frame circuit breaker and cannot be removed or replaced). This value is printed in a window above the trip unit.

NOTE: The maximum ampere rating a circuit breaker family can carry is called the frame size. Sensor size is less than or equal to frame size.

The ampere rating of an electronic trip circuit breaker is determined by the mathematical equation:

Ampere Rating = Sensor Size (Io) x Long-Time (Ir)

The rating plug varies the circuit breaker ampere rating as a function of its sensor size. Rating plugs have nine dial settings; the multiplier values corresponding with each setting are printed on the rating plug. The maximum setting range is 0.4–1.0 x In.

© 2007–2010 Schneider Electric
All Rights Reserved

Standard and 100% Ratings

Special constructions are designed for continuous operation at 100% of their current rating. All 400 A and smaller D-frame circuit breakers are 100% rated. The 600 A D-frames are standard (80%) rated only.

Trip System

The trip system causes the circuit breaker to open automatically under overload, short-circuit or equipment ground-fault conditions. Electronic trip circuit breakers give the customer more versatility to achieve coordination with features such as adjustable instantaneous pickup and high withstand ratings.

Communication between trip units allows zone-selective interlocking (ZSI) between circuit breakers at different levels in the system. ZSI reduces fault stress by allowing the upstream circuit breaker closest to the fault to ignore its preset delay time and trip without any intentional delay on a short circuit or ground fault. For more information on ZSI, see data bulletin Reducing Fault Stress with Zone-Selective Interlocking.

For more information, see “Trip Units for PowerPact® D-Frame Circuit Breakers” on page 17.

Enclosed Breaking System

The 3 and 4-pole D-Frame circuit breakers are made up of several identical breaking units. Each is housed in a thermoset polyester enclosure. Thanks to this design the mechanism, the trip unit and internal accessories are protected from the negative effects of interruption (pressure, temperature rise, electromagnetic disturbances).

This technique, developed by Schneider Electric, makes it possible to manufacture relatively small circuit breakers offering outstanding high interrupting capacities, current limitation and endurances.

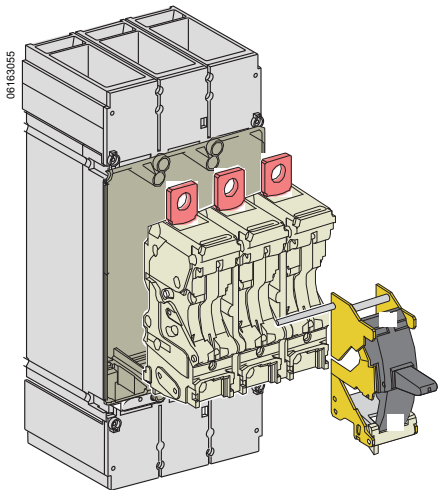

Dual-Break Rotating Contacts

All PowerPact® D-frame circuit breakers are equipped with dual-break rotating contacts that reduce the amount of peak current during a short circuit fault. The moving contact has the shape of an elongated “S” and rotates around an floating axis. The shape of the fixed and moving contacts are such that the repelling forces appear as soon as the circuit reaches approximately 15 times In.

© 2007–2010 Schneider Electric
All Rights Reserved

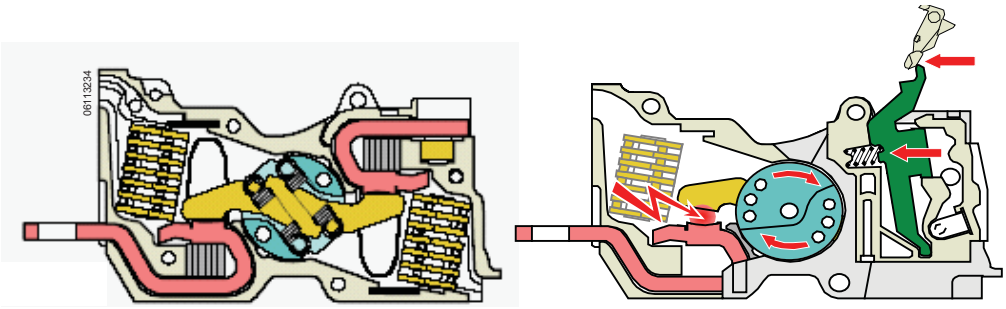

Reduced Let-Through Currents

Due to the rotating movement, repulsion is rapid and the device greatly limits short-circuit currents, whatever the interrupting level of the unit (G, J or L). The fault current is extinguished before it can fully develop. This enhances equipment protection. Lower let-through currents result in less peak energy, thus reducing the required bus bar bracing, lowering enclosure pressure, and delivering improved series or combination ratings.

Piston Assist of Tripping

As soon as the current reaches approximately 25 times the nominal current, the contacts naturally open, and an arc appears, creating a temperature rise (and pressure) in the breaking unit. The pressure is ported to a piston which is located between breaking units and is used to trip the circuit breaker within a couple of milliseconds.

Internal Operating Mechanism

D-frame circuit breakers have a single operating handle that acts directly through the operating mechanism against the contact blades. Multi-pole circuit breakers have a common trip bar for positive action of all poles on manual and automatic operation. These circuit breakers have a trip-free mechanism that allows them to trip even though the operating handle may be restricted (by a handle operating mechanism or padlock attachment) in the ON position. If not restricted, the operating handle moves to a position between ON and OFF when the circuit breaker is tripped.

The face of the circuit breakers is marked with standard ON/OFF and international I/O markings to indicate handle position. In addition, the OFF portion of the circuit breaker handle is color coded green.

Push-to-Trip Button

The push-to-trip button located on the face of each circuit breaker is a standard feature on these circuit breakers. This allows the user to manually trip the circuit breaker without risking exposure to live parts. During normal on-off operation, the handle opens and closes the circuit breaker contacts but does not exercise the tripping mechanism.

Use the push-to-trip button to:

- Exercise the circuit breaker mechanism
- Check the auxiliary and alarm switch circuits

© 2007–2010 Schneider Electric
All Rights Reserved

Low Let-Through Current

The low let-through capacity of a circuit breaker is its ability to limit short-circuit currents. Advantages include:

- Longer service life as current limiting circuit breakers greatly reduce the negative effects of short circuits on installations
- Less temperature rise in conductors, therefore longer service life for cables
- Reduced electrodynamic forces, therefore less risk of electrical contacts or busbars being distorted or broken
- Less electromagnetic effects, resulting in less disturbance for measuring devices located near electrical circuits

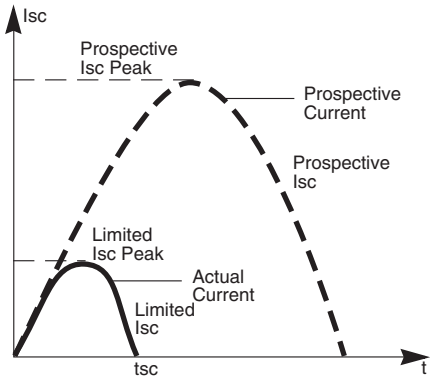

The low let-through capacity of the PowerPact D-frame circuit breaker is due to the double break technique (rapid natural repulsion of contacts and the appearance of two arc voltages in series with a steep wavefront). Refer to Let-Through Curves on pages 63–66.

This low let-through capacity of the PowerPact circuit breaker line greatly reduces the forces created by fault currents in devices. The result is a major increase in breaking performance. In particular, the service breaking capacity Ics is equal to 100% of Icu (ultimate breaking capacity).

The Ics value, defined by IEC 60947-2, is guaranteed by tests comprising the following operations:

- Breaking a fault current equal to 100% of Icu three times consecutively
- Checking that the device continues to function normally
- Conduction of rated current without abnormal temperature rise
- Protection functions perform within the limits specified by the standard
- Suitability for isolation is not impaired.

Operating Conditions

Temperature

To meet the requirements of the UL489 Standard, molded case circuit breakers are designed, built and calibrated for use on 50/60 Hz ac systems in a 104°F (40°C) ambient environment. Unlike thermal-magnetic circuit breakers, the electronic trip units react only to the magnitude of the current flowing through the circuit breaker and are therefore inherently ambient insensitive.

However, the ambient temperature does affect the insulation of the conductors and other elements of the system. Therefore, if the STR23SP or STR53UP trip units are used at high operating temperatures, the setting must take into account the thermal limits of the circuit breaker. See table 5 below for fixed circuit breaker and switch re-rating values.

Table 5: Maximum Long-Time (LT) Protection Setting Depending on Ambient Temperature

Rating	Temperature	40°C	45°C	50°C	55°C	60°C	65°C	70°C
400 A	In: 400 A	400	400	400	390	380	370	360
	Io/Ir Max.	1/1	1/1	1/1	1/0.98	1/0.95	1/0.93	1/0.9
600 A	In: 600 A	600	590	570	560	540	530	510
	Io/Ir Max.	1/1	1/0.98	1/0.95	1/0.93	1/0.9	1/0.88	1/0.85

© 2007–2010 Schneider Electric
All Rights Reserved

Enclosures

Table 6: Minimum Enclosure Sizes Without Ventilation for D-Frame Circuit Breakers

Type		Rating	H	W	D
Fixed	DG 400	100%	40.50 in. (1030 mm)	13.75 in. (350 mm)	4.33 in. (110 mm)
	DJ 400				
	DL 400				
	DG 600	80%			
	DJ 600				
	DL 600				
Drawout	DG 400	100%	40.50 in. (1030 mm)	13.75 in. (350 mm)	6.33 in. (160 mm)
	DJ 400				
	DL 400				
	DG 600	80%			
	DJ 600				
	DL 600				

Altitude

D-frame circuit breakers are suitable for use at altitudes up to 13,100 ft. (4000 m). For altitudes higher than 6560 ft. (2000 m), circuit breakers must be rerated as shown.

Table 7: Altitude Rerating Values per ANSI C37.20.1 Table 10

Altitude	≤ 6,600 ft. (≤ 2,000 m)	8,500 ft. (2,600 m)	13,000 ft. (3,900 m)
Voltage	1.00	0.95	0.80
Current	1.00	0.99	0.96

Storage Temperature

Circuit breakers with trip units may be stored in the original packaging at temperatures between -58°F (-50°C) and 185°F (85°C).

Extreme Atmospheric Conditions

PowerPact circuit breakers have successfully passed the tests defined below for extreme atmospheric conditions.

Dry cold and dry heat:

- IEC 68-2-1—Dry cold at -55°C
- IEC 68-2-2—Dry heat at +85°C

Damp heat (tropicalization)

- IEC 68-2-30—Damp heat (temperature +55°C and relative humidity of 95%)
- IEC 68-2-52 level 2—Salt mist

The materials used in the PowerPact circuit breakers will not support the growth of fungus and mold.

Vibration

PowerPact circuit breakers meet IEC 60068-2-6 Standards for vibration:

- 2 to 13.2 Hz and amplitude 0.039 in. (1 mm)
- 13.2 to 100 Hz constant acceleration

© 2007–2010 Schneider Electric
All Rights Reserved

Codes and Standards

D-frame electronic trip circuit breakers and switches are manufactured and tested in accordance with the following standards:

Table 8: Standards

Circuit Breakers	Switches
UL 489[1] IEC Standard 60947-2 CSA 22.2 No 5-02[2] Federal Specification W-C-375B/GEN NEMA AB1 NF, VDE, BS, CEI, AS	UL 489 IEC Standard 60947-3 CSA 22.2 No 5-02 Federal Specification W-C-375B/GEN NEMA AB1 NF, VDE, BS, CEI, AS

1 Circuit breakers, switches and their accessories, except where noted, are Listed under UL files E63335, E103740 and E103955

2 Circuit breakers, switches and their accessories, except where noted, are Certified under CSA files LR69561 and LR88980

Circuit breakers should be applied according to guidelines detailed in the National Electrical Code® (NEC®) and other local wiring codes.

Specifications of Marine Classification Organizations

PowerPact D-frame circuit breaker is UL Listed per UL489 Supplement SA. Certifications for marine application by the American Bureau of Shipping, Bureau Vertas, Lloyd's Register of Shipping, Registro Italiano Navale, Germanischer Lloyd's and Det Norske Veritas are pending.

Pollution Degree

PowerPact circuit breakers are certified for operation in pollution degree III environments as defined by IEC standard 60947-1 (industrial environments).

Environmental Protection

PowerPact circuit breakers take into account concerns for environmental protection. Most components are recyclable and parts are marked as specified in applicable standards.

Suitability for Isolation (Positive Contact Indication)

Circuit Breaker Marking

Switch Marking

All PowerPact circuit breakers and switches are suitable for isolation as defined in the IEC 60947-2 Standard:

- The isolation position corresponds to the off (O) position
- The operating handle cannot indicate the off position unless the contact are open
- Padlocks may not be installed unless the contacts are open

Installation of a rotary handle or a motor mechanism does not alter the functionality of the position indication system.

The isolation function is certified by tests guaranteeing:

- The mechanical reliability of the position indication system
- The absence of leakage currents
- Overvoltage withstand capacity between upstream and downstream connections

© 2007–2010 Schneider Electric
All Rights Reserved

Testing Requirements

UL, NEMA and CSA requirements

The UL, NEMA and CSA labels on a circuit breaker indicate that the circuit breaker meets the requirements of UL Standard 489, NEMA Standard AB-1 and CSA Standard C22.2. The labels also mean that the production procedure is monitored by UL, CSA and ANCE inspectors to ensure continued compliance to these standards. These requirements include the following tests:

- *200% Overload Calibration*—each pole of the circuit breaker must trip within a specified time limit when carrying 200% of its continuous current rating.
- *135% Overload Calibration*—with all poles connected in series, the circuit breaker must trip within a specified time limit while carrying 135% of its continuous current rating.
- *Overload*—the circuit breaker must make and break 600% of its continuous current rating at rated voltage. Circuit breaker frame sizes through 1600 A must perform 50 operations at 600%. (Circuit breaker frame sizes 1600 A through 2500 A must perform 25 operations at 600%.)
- *Temperature Rise*—while carrying 100% of rated current and mounted in open air, temperature rise on a wiring terminal must be within specified limits. For 100% rating, the circuit breaker is mounted in an enclosure of specified dimensions.
- *Endurance*—the circuit breaker must complete the following number of operations:

Table 9: Endurance Operations

Frame Size	Operations With Current	Operations Without Current
600	1000	5000

- *Calibration*—both the 200% and 135% overload calibration tests are repeated after endurance testing.
- *Short Circuit*—the circuit breaker shall be subjected to test currents based on voltage rating and frame size; with the type and number of operations based on number of poles, frame rating and voltage rating. Example: a 3-pole, 600 Vac, 600 A frame circuit breaker is subjected to one 20 kA single phase closing of the circuit on the circuit breaker per pole and one 30 kA three phase closing of the circuit on the circuit breaker for a total of seven short circuit tests.
- *Trip Out*—the 200% thermal calibration test is repeated following the short-circuit tests.
- *Dielectric*—the circuit breaker must withstand, for one minute, twice its rated voltage plus 1000 V:
  - Between line and load terminals with the circuit breaker in the tripped and in the OFF positions.
  - Between terminals of opposite polarity with the circuit breaker closed.
  - Between live parts and the overall enclosure with the circuit breaker both open and closed.

No conditioning of the circuit breaker can take place during or between tests. There can be no failure of functional parts at the conclusion of the sequences.

After qualifying a set of circuit breakers to the standard tests, a manufacturer can have additional circuit breaker samples tested on higher than standard available fault currents. The following performance requirements apply:

- *200% Overload Calibration*—each pole of the circuit breaker must trip within a specified time limit when carrying 200% of its continuous current rating.
- *Short-Circuit Test*—with the load side terminals connected by 10-inch lengths of specified cable (or a shorting bar), the circuit breaker is exposed to a short-circuit current for a set time interval. After safe interruption, the circuit breaker is reset and closed again on the short circuit.
- *250% Overload Calibration*—each pole of the circuit breaker must trip within a specified time limit when carrying 250% of its continuous current rating.

© 2007–2010 Schneider Electric
All Rights Reserved

- *Dielectric Withstand*—the circuit breaker is subjected to twice the voltage rating at which the interrupting test was conducted, but not less than 900 V.
  - — Between line and load terminals with the circuit breaker in the tripped and in the OFF positions.
  - — Between terminals of opposite polarity with the circuit breaker closed.
  - — Between live parts and the overall enclosure with the circuit breaker both open and closed.

When the sample circuit breakers pass these tests, circuit breakers of the same construction can be marked or labeled with the current interrupting rating for the higher fault currents.

IEC Requirements

The IEC markings on a circuit breaker indicates that the circuit breaker meets the requirements of IEC Standard 60947-2 for circuit breakers and 60947-3 for automatic switches. These requirements include the following tests:

Table 10: IEC Test Sequence

Sequence	Category of Devices	Tests
General Performance Characteristics (Sequence 1)	All Circuit Breakers	• Tripping limits and characteristics • Dielectric properties • Mechanical and electrical endurance • Overload • Dielectric voltage withstand • Temperature rise • 145% calibration (3 poles in series or 3-phase test)
Rated Service Short-Circuit Breaking Capacity (Ics) (Sequence 2)	All Circuit Breakers	• Rated service short circuit breaking capacity (O-t-CO-t-CO) • Electrical endurance (5% of with current operations of Sequence 1) • Dielectric voltage withstand • Temperature rise • 145% calibration (3 poles in series or 3-phase test)
Rated Ultimate Short-Circuit Breaking Capacity (Icu) (Sequence 3)	Circuit Breakers of Utilization Category A Circuit Breakers of Utilization Category B	• 200% calibration (each pole separately) • Rated ultimate short circuit breaking capacity (O-t-CO) • Dielectric voltage withstand • 250% calibration (each pole separately)
Rated Short-Time Withstand Current (Icw) (Sequence 4)	Circuit Breakers of Utilization Category B	• 200% calibration (each pole separately) • Rated short-time withstand current • Temperature rise • Short-circuit breaking capacity at maximum short-time withstand current (O-t-CO) • Dielectric voltage withstand • 200% calibration (each pole separately)
Combined Sequence	Circuit Breakers of Utilization Category B: When Icw = Ics Replaces Sequences 2 and 4 When Icw = Ics = Icu Replaces Sequences 2, 3 and 4	• 200% calibration (each pole separately) • Rated short-time withstand current Icw • Rated service short-circuit breaking capacity at Ics (O-CO-CO) at maximum relay temp. • 145% calibration (3 poles in series or 3-phase test) • Dielectric voltage withstand • Temperature rise • 200% calibration (each pole separately)
Individual Pole Short-Circuit Test Sequence (Annex H)	Circuit Breakers for Use in IT Systems	• Individual pole short-circuit breaking capacity • Dielectric voltage withstand • 250% calibration (each pole separately)

The CCC (Chinese Compulsory Certification) marking now applies to these PowerPact D-frame circuit breakers:

- Unit-mounted circuit breakers
- Unit-mounted motor circuit protectors (MCP)

This rating allows our customers to support their international business. All products exported to China by OEMs and Panelbuilders have to be CCC marked. Using CCC certified components helps customers obtain and maintain the CCC certification on their equipment.

The CCC marking does not apply to automatic switches or any I-Line mounted products.

© 2007–2010 Schneider Electric
All Rights Reserved

Section 2—Electronic Trip Units and Test Kits

Trip Units for PowerPact® D-Frame Circuit Breakers

PowerPact D-frame circuit breakers are equipped with current sensors and an STR electronic trip unit. Current sensors are available in two different sizes:

- 400 A frame—150, 250 and 400 A versions
- 600 A frame—600 A version

STR trip units provide protection for loads, from 60 to 600 A:

- STR23SP and STR53UP for standard protection can be mounted on all circuit breakers
- Trip unit STR53UP offers a greater number of optional indication and measurement functions, protection settings and ground-fault protection
- STR23SP-OSN for oversized neutral protection (factory-installed only)
- STR53UP for generator supplied network protection and long cable runs
- STR23SP and STR53UP trip units are available on 4P circuit breakers with sealable, three-position neutral protection setting:
  - 4P 3D (no neutral protection)
  - 4P 3D + N/2 (neutral protection at 0.5 x Ir) where Ir is trip unit current setting
  - 4P 4D (neutral protection at Ir) where Ir is trip unit current setting.

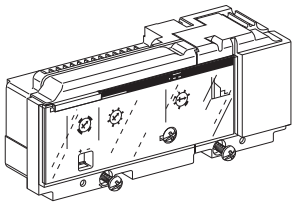

© 2007–2010 Schneider Electric
All Rights Reserved

Table 11: Trip Units

			STR23SP	STR53UP				
Overload Protection (Long-Time)								
Tripping Threshold (A)	In	20–70°C	Adjustable (48 Settings) 0.4–1 x In	Adjustable (32 Settings) 0.4–1 x In				
Tripping Time (s) (Min–Max)		—	**Fixed**	**Adjustable**				
		At 1.5 x Ir	120–180	17–25	34–50	69–100	138–200	277–400
		At 6 x Ir	5–7.5	0.8–1	1.6–2	3.2–4	6.4–8	12.8–16
		At 7.2 x Ir	3.2–5.0	0.5–0.7	1.1–1.4	2.2–2.8	4.4–5.5	8.8–11
Short-Circuit Protection (Short Time)								
Tripping	**IM/ISD**		Adjustable (7 Settings) 2–9 x Ir	Adjustable (7 Settings) 1.5–7 x Ir				
	Accuracy		± 15%					
Time Delay (ms)	Max. Overcurrent Time Before Tripping		Fixed ≤ 40	Adjustable (4 Settings + Constant I^2t Function)				
				≤ 15	≤ 60	≤ 140	≤ 230	
	Total Breaking Time		≤ 60	≤ 60	≤ 140	≤ 230	≤ 350	
Short-Circuit Protection (Instantaneous)								
Tripping Threshold (A)			Fixed ≥ 9 x In	Adjustable (7 Settings) 1.5–7 x Ir				
Adjustable Neutral Protection (Three Position Switch) (STR23SP OSN[1] only)								
	Switch	Settings	Protection Level					
	Position 1	4P 3D	No Neutral Protection	—				
	Position 2	4P 3D + N/2	0.5 x Ir	—				
	Position 3	4P 4D	1.0 x Ir	—				

Electronic Trip Unit (Field Replaceable)

	Trip Unit[2]	Trip Function	Suffix	**Cat. No.**
Long-Time, Short-Time and Fixed Instantaneous Protection	STR23SP	LS	E20	**36940**
Long-Time, Short-Time, Instantaneous Protection and Options	STR53UP-F	LSI	E53	**36942**
	STR53UP-FT	LSIG	E54	**36943**
	STR53UP-FI	LSI	E58	**36944**
	STR53UP-FTI	LSIG	E59	**36945**
	Communication Wiring	—	—	**32441**
	Replacement Battery	—	—	**32434**

1 Oversized Neutral

2 F - Fault Indicator; T = Residual-Type Ground-Fault Protection; I = Ammeter

© 2007–2010 Schneider Electric
All Rights Reserved

Electronic Trip Unit STR23SP and SR23SP-OSN (Oversized Neutral)

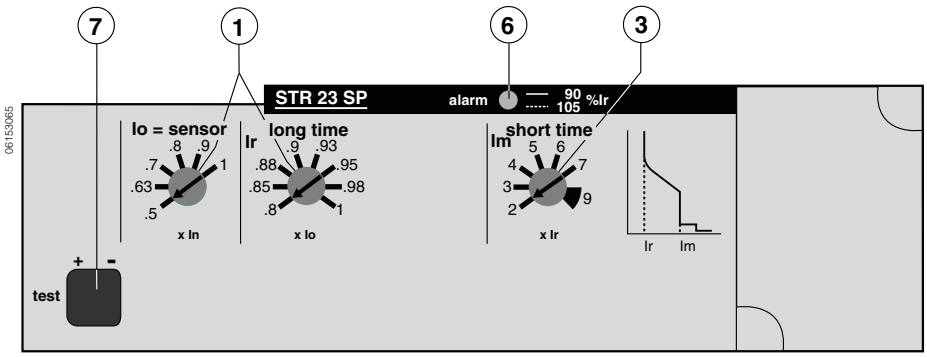

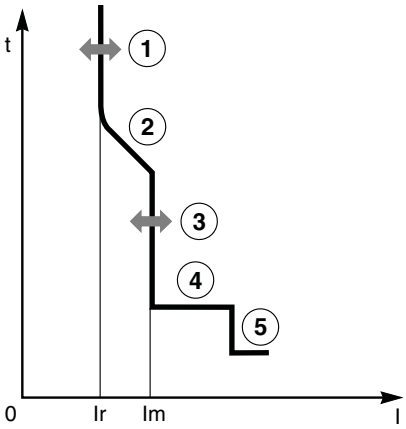

Definitions

I =	Current
In =	Nominal Current = Sensor Rating
Io =	Course Adjustment x In
Ir =	Long-Time (LT) Pickup x Io
Im =	Short-Time (ST) Pickup x Ir

Protection

- Long-time (LT) overload protection, adjustable threshold, based on the actual RMS current:
  - Adjustable threshold (2) using six Io base settings (0.5–1) and fine adjustment Ir with eight settings (0.8–1)
  - Non-adjustable tripping time (2)
- Short-time (ST) short-circuit protection:
  - Adjustable threshold Im (3)
  - Fixed time delay (4)
- Instantaneous (I) short-circuit protection, fixed threshold (5)
- Neutral protection available on standard 4P circuit breakers; protection level controlled using three-position switch:
  - 4P 3D: no protection of neutral
  - 3D + N/2: neutral protection at 0.5 Ir
  - 4P 4D: neutral protection at Ir
- Neutral protection for STR23SP-OSN (oversized neutral) available on four-pole circuit breakers equipped with oversized neutral protection; protection level controlled using three-position switch:
  - 4P 3D: no protection of neutral
  - 3D + N/2: neutral protection at 0.75 x Ir
  - 4P 4D: neutral protection at 1.5 x Ir

Indications

Load indication (LED) in front (6):

- Lights solid at 90% of Ir threshold
- Flashes at > 105% or greater of Ir threshold

Test

Test connector in front (7) allows connection to the test kit, to check circuit breaker operation after fitting the trip unit or other accessories.

Setting Example

Question: what is the overload protection threshold of a 400 A D-frame circuit breaker equipped with trip unit STR23SP where Io - 0.5 and Ir - 0.8?

© 2007–2010 Schneider Electric
All Rights Reserved

Answer: In x Io x Ir = 400 x 0.5 x 0.8 = 160 A

The same trip unit with the same settings, mounted on a 600 A frame circuit breaker, will have the following tripping threshold: In x Io x Ir = 600 x 0.5 x 0.8 = 240 A.

Electronic Trip Unit STR53UP

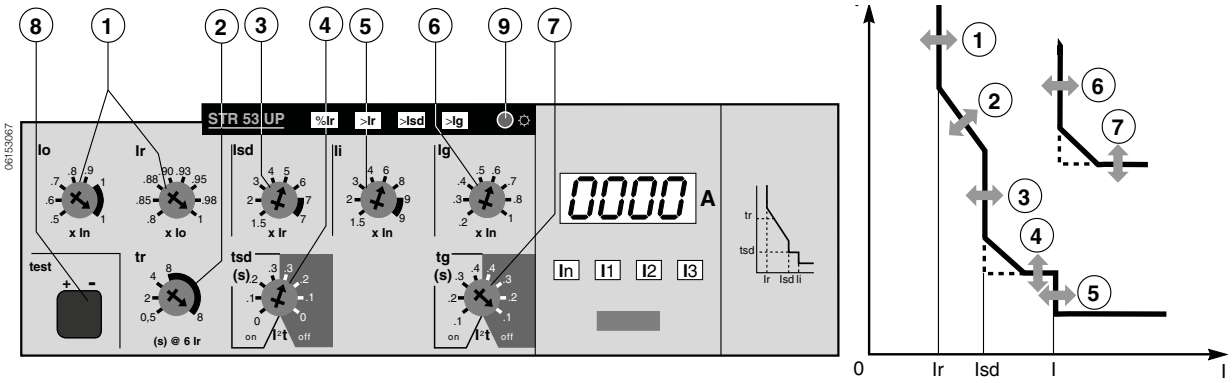

Protection

Definitions

I =	Current
In =	Nominal Current = Sensor Rating
Io =	Course Adjustment x In
Ir =	Long-Time (LT) Pickup x Io
Im =	Short-Time (ST) Pickup x Ir
Isd =	Instantaneous Pickup
Ig =	Ground-Fault Pickup

- Long-time (LT) overload protection, adjustable threshold, based on actual rms current, as defined by IEC 60947-2, appendix F:
  - Adjustable threshold (1) using six Io base settings (0.5–1) and fine adjustment Ir with eight settings ranging (0.8–1)
  - Adjustable tripping time (2)
- Short-time (ST) short-circuit protection:
  - Adjustable threshold Isd (3)
  - Adjustable time delay (4), with or without constant I^2t function
- Instantaneous (Ii) short-circuit protection, adjustable threshold (5)
- Neutral protection available on standard 4P circuit breakers; protection level controlled using three-position switch:
  - 4P 3D: no protection of neutral
  - 3D + N/2: neutral protection at 0.5 Ir
  - 4P 4D: neutral protection at Ir

Overload Indications (%Ir)

- LED (9) lights solid when current exceeds 0.9 Ir
- LED (9) flashes when current exceeds long-time threshold Ir

Fault Indications

LEDs indicate the type of fault that caused tripping:

- Overload (LT protection) or abnormal component temperature (> Ir)
- Short-circuit (ST or instantaneous protection) (> Isd)
- Ground-fault (if ground-fault protection option is present) > Ig
- Microprocessor malfunction—both (> Ir and > Isd) LEDs go on, plus the > Ig LED, if the ground fault protection option is present

The LEDs are battery powered with spare batteries supplied in the adapter box. When a fault occurs, the LED indicating type of fault shuts off after approximately 10 minutes to conserve battery power.

© 2007–2010 Schneider Electric
All Rights Reserved

The fault data is stored in memory and the LED can be re-illuminated by pressing the battery/LED test button (9). The LED automatically goes off and memory is cleared when the circuit breaker is reset.

Test

- Test connector in front (8) for connection to test kit (see page 20); used to check circuit breaker operation after fitting trip unit or other accessories
- Test button (9) for LEDs (%Ir, > Ir, > Im and > Ig) and battery

Self-Monitoring

The circuit breaker trips for both microprocessor faults and abnormal temperatures.

Options for Electronic Trip Unit STR53UP

Equipment Ground-fault Protection

Table 12: Equipment Ground-Fault Protection (T)—See (6) and (7), Page 20

Type		Residual Current
Tripping Threshold	Ig	Adjustable (8 Settings) 0.2–1 x In
	Accuracy	± 15%
Tripping Time	Max. Overcurrent Time Before Tripping (Tg)	Adjustable (4 Settings + Constant ([^{2}t] Function) 60, 140, 230, 350
	Total Breaking Time	-140, -230, -350, -500

Ammeter (I)

A digital display continuously indicates the current of the phase with the greatest load. By pressing a scroll button, it is also possible to display successively the readings of I1, I2, I3 and I neutral. LEDs indicate the phase for which the current is displayed.

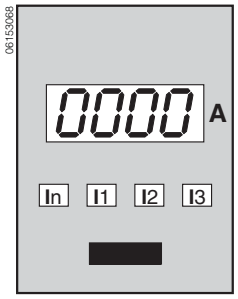

Zone-Selective Interlocking (ZSI) with STR53 Trip Unit

The STR53 trip unit provides an output for selective zone interlocking with an upstream circuit breaker or other device. In the event of a short circuit or ground fault:

- If a given STR53UP trip unit detects a fault, it informs the upstream circuit breaker, which will not trip for the preset time delay, allowing the downstream device to trip first.
- If the STR53UP trip unit does not detect the fault, the upstream circuit breaker trips after its preset time delay

In this way, the fault is cleared rapidly by the nearest circuit breaker. In addition, thermal stresses on the circuits are minimized and time discrimination is maintained throughout the installation.

The upstream device must be an S48890 or S48895 Restraint Interface Module (RIM), a circuit breaker with a Micrologic #.0x trip unit, or an STR58 trip unit. These signals are output from terminals Z11 and Z12 of the STR53 trip unit.

Optical Outputs

The use of optical transistors ensures total isolation between the internal circuits of the trip unit and the circuits wired by the user.

© 2007–2010 Schneider Electric
All Rights Reserved

External Neutral Current Transformers (CT)

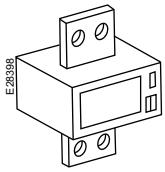

Current transformers are available for applications requiring ground-fault protection on three-phase, four-wire systems or for neutral protection and metering. Neutral current transformers are not required on non-ground-fault circuit breakers or on three-phase, three-wire systems. The rating of the external neutral current transformer must be compatible with the rating of the circuit breaker.

Table 13: External Neutral CT (Sensor)

Rating	Cat. No.
150 A	**36950**
250 A	**36951**
400 A	**36952**
600 A	**36953**

Electronic Trip Unit Test Kits

The test kits presented below are compatible with D-frame (and Compact NSJ) circuit breakers.

Tests performed by test kits are only functional tests deigned to electrically test the operation integrity of the trip unit, the flux shifter, and the mechanical operation of the circuit breaker. Tests are not designed to calibrate the circuit breaker.

Mini Test Kit (43362) and Hand-Held Test Kit (S33594)

The Mini Test Kit and the Hand-Held Test Kit are portable units which require no external power supply. Both are powered by five 9 V alkaline batteries, not supplied. These test kits are used to check operation of the electronic trip unit and circuit breaker tripping. Connection of either test kit is made via the test port on the front of the trip unit.

Mini Test Kit

Hand-Held Test Kit

Portable Test Kit (55391)

The Portable Test Kit and the Full-Function Test Kit are calibration units. Both require a power supply of 110 or 240 Vac, 50/60 Hz (two-position selector). These test kits are used to check the operation of the trip unit by measuring actual trip times:

- At 1.5 x Ir for long-time protection
- At 15 x Ir for short-time protection
- At 0.8 x In for ground-fault protection

Manual test mode is also available.

© 2007–2010 Schneider Electric
All Rights Reserved

Full-Function Test Kit (S33595)

The full-function test kit consists of a signal-injection box which can be used alone or with a supporting personal computer (PC). The optional test kit software is compatible with Windows® 95, 98 and Windows NT® operating systems.

The test kit without a supporting PC may be used to check:

- The mechanical operation of the circuit breaker
- The electrical continuity of the connection between the tripping coil and the trip unit
- Trip unit operation — for example:
  - — Display of settings
  - — Operating tests on the electronic component
  - — Automatic and manual tests on protection functions (trip curve verification)
  - — Tests on the Zone-Selective Interlocking (ZSI) function
  - — Inhibition of the ground-fault protection for equipment
  - — Inhibition of the thermal imaging
- Save test data into test kit

The test kit with a supporting PC may be used to:

- Print test data
- Compare the real tripping curve with the curves available on the PC

Table 14: Full-Function Test Kit Catalog Numbers

Device	Cat. No.
Full-function Test Kit	**S33595**
Two-Pin Test Cable (for Connection Between Test Kit and Trip Unit)[1]	**S48908**
230 Vac Filtered Power Cord[1]	**S48856**
120 Vac Filtered Power Cord[1]	**S48855**

[1] Included in the test kit. Kit for replacement only.

© 2007–2010 Schneider Electric
All Rights Reserved

Section 3—Circuit Breakers

Introduction

PowerPact® D-frame electronic trip molded case circuit breakers are available tested to UL 489 or IEC 609476-2, in three interruption ratings.

Ratings and Interrupting Ratings

Table 15: Ratings and Interrupting Ratings

				Circuit Breaker[1,2]					
Rated Current (A)	In		40° C	400[3]			600[4]		
Number of Poles				3, 4, 4 OSN[5]			3, 4		
UL489 Ratings									
Rated Current		AC 50/60 Hz		600 Vac			600 Vac		
Interrupting Ratings (kA rms)		AC 50/60 Hz		G	J	L	G	J	L
			240 V	65	100	125	65	100	125
			480 V	35	65	100	35	65	100
			600 Y/347 V	—	—	—	—	—	—
			600V	18	25	25	18	25	25
IEC 60947-2 and EN 60947-2 Ratings									
Rated Insulation Voltage	Ui			750 V			750 V		
Rated Impulse Withstand Voltage (kV)	Uimp			8 kV			8 kV		
Rated Operational Voltage	Ue	AC 50/60 Hz		690 V			690 V		
		DC		500 V			500 V		
				N	H	L	N	H	L
Ultimate Breaking Capacity (kA rms)	Ic	AC 50 Hz	220/240 V	85	100	150	85	100	150
			330/415 V	45	70	150	45	70	150
			445 V	42	65	130	42	65	130
			500 V	30	50	70	30	50	70
			525 V	22	35	50	22	35	50
			600/690 V	10	20	35	10	20	35
Service Breaking capacity	Ics		(% Icu)	100%	100%	100%	100%	—	100%
Utilization Category				A	A	A	A	—	A

1 For 4-pole device, replace the 3 in the fourth position with a 4.
2 4-pole devices are available in plug-in (N), draw-out (D) and rear-connected (S) only.
3 100% Rated Circuit Breaker
4 100% rated in rear-connected figuration only.
5 Oversized Neutral

Table 16: D-Frame 3P 600 A Circuit Breakers, Frame Only

Basic Frame Only (600 Vac)[1]			
Ampere Rating	**G Interrupting**	**J Interrupting**	**L Interrupting**
	Cat. No.	**Cat. No.**	**Cat. No.**
150 A	**DGL36150F40**	**DJL36150F40**	**DLL36150F40**
250 A	**DGL36250F40**	**DJL36250F40**	**DLL36250F60**
400 A	**DGL36400F40**	**DJL36400F40**	**DLL36400F40**
600 A	**DGL36600F60**	**DJL36600F60**	**DLL36600F60**

1 Available with lugs (L) or bus (F) connections only.

© 2007–2010 Schneider Electric
All Rights Reserved

Table 17: D-Frame 3P 50/60 Hz Unit-Mount Circuit Breaker with Lugs and Electronic Trip Units Catalog Numbers[1]

Electronic Trip Unit Type	Trip Function	Trip Unit[2]	Continuous Current[3]	Catalog Number			(Wires per Terminal) Wire Range (AWG/kcmil)
				G Interrupting	J Interrupting	L Interrupting	
Standard	LS	STR23SP	150 A	**DGL36150E20**	**DJL36150E20**	**DLL36150E20**	(1) 2–600 Cu or (1) 2–500 Al
			250 A	**DGL36250E20**	**DJL36250E20**	**DLL36250E20**	
			400 A	**DGL36400E20**	**DJL36400E20**	**DLL36400E20**	
			600 A	**DGL36600E20**	**DJL36600E20**	**DLL36600E20**	(2) 2/0–350 Cu or (2) 2/0–500 Al
	LSI	STR53UP-F	150 A	**DGL36150E53**	**DJL36150E53**	**DLL36150E53**	(1) 2–600 Cu or (1) 2–500 Al
			250 A	**DGL36250E53**	**DJL36250E53**	**DLL36250E53**	
			400 A	**DGL36400E53**	**DJL36400E53**	**DLL36400E53**	
			600 A	**DGL36600E53**	**DJL36600E53**	**DLL36600E53**	(2) 2/0–350 Cu or (2) 2/0–500 Al
	LSIG	STR53UP-FT	150 A	**DGL36150E54**	**DJL36150E54**	**DLL36150E54**	(1) 2–600 Cu or (1) 2–500 Al
			250 A	**DGL36250E54**	**DJL36250E54**	**DLL36250E54**	
			400 A	**DGL36400E54**	**DJL36400E54**	**DLL36400E54**	
			600 A	**DGL36600E54**	**DJL36600E54**	**DLL36600E54**	(2) 2/0–350 Cu or (2) 2/0–500 Al
Ammeter	LSI	STR53UP-FI	150 A	**DGL36150E58**	**DJL36150E58**	**DLL36150E58**	(1) 2–600 Cu or (1) 2–500 Al
			250 A	**DGL36250E58**	**DJL36250E58**	**DLL36250E58**	
			400 A	**DGL36400E58**	**DJL36400E58**	**DLL36400E58**	
			600 A	**DGL36600E58**	**DJL36600E58**	**DLL36600E58**	(2) 2/0–350 Cu or (2) 2/0–500 Al
	LSIG	STR53UP-FTI	150 A	**DGL36150E59**	**DJL36150E59**	**DLL36150E59**	(1) 2–600 Cu or (1) 2–500 Al
			250 A	**DGL36250E59**	**DJL36250E59**	**DLL36250E59**	
			400 A	**DGL36400E59**	**DJL36400E59**	**DLL36400E59**	
			600 A	**DGL36600E59**	**DJL36600E59**	**DLL36600E59**	(2) 2/0–350 Cu or (2) 2/0–500 Al

1 Refer to Table 2 for catalog numbering for 4-pole circuit breakers and termination options.
2 F = Fault indicator; T = Residual-type ground-fault protection; I = Ammeter
3 D-frame circuit breaker 400 A and below are 100% rated, 600 A are standard (80%) rated.

New!

Table 18: D-Frame 3P 50/60 Hz I-Line® Circuit Breaker with Lugs and Electronic Trip Units Catalog Numbers

Electronic Trip Unit Type	Trip Function	Trip Unit[1]	Continuous Current[2]	Catalog Number			(Wires per Terminal) Wire Range (AWG/kcmil)
				G Interrupting	J Interrupting	L Interrupting	
Standard	LS	STR23SP	150 A	**DGA34150E20**	**DJA34150E20**	**DLA34150E20**	(1) 2–600 Cu or (1) 2–500 Al
			250 A	**DGA34250E20**	**DJA34250E20**	**DLA34250E20**	
			400 A	**DGA34400E20**	**DJA34400E20**	**DLA34400E20**	
			600 A	**DGA34600E20**	**DJA34600E20**	**DLA34600E20**	(2) 3/0–500 Al/Cu
	LSI	STR53UP-F	150 A	**DGA34150E53**	**DJA34150E53**	**DLA34150E53**	(1) 2–600 Cu or (1) 2–500 Al
			250 A	**DGA34250E53**	**DJA34250E53**	**DLA34250E53**	
			400 A	**DGA34400E53**	**DJA34400E53**	**DLA34400E53**	
			600 A	**DGA34600E53**	**DJA34600E53**	**DLA34600E53**	(2) 3/0–500 Al/Cu
Ammeter	LSI	STR53UP-FI	150 A	**DGA34150E58**	**DJA34150E58**	**DLA34150E58**	(1) 2–600 Cu or (1) 2–500 Al
			250 A	**DGA34250E58**	**DJA34250E58**	**DLA34250E58**	
			400 A	**DGA34400E58**	**DJA34400E58**	**DLA34400E58**	
			600 A	**DGA34600E58**	**DJA34600E58**	**DLA34600E58**	(2) 3/0–500 Al/Cu

1 F = Fault indicator; T = Residual-type ground-fault protection; I = Ammeter
2 D-frame circuit breaker 400 A and below are 100% rated, 600 A are standard (80%) rated.

© 2007–2010 Schneider Electric
All Rights Reserved

Section 4—Mission Critical Circuit Breakers

The PowerPact® D-Frame Mission Critical circuit breakers deliver high levels of selective coordination in a flexible design that can be easily configured for a variety of applications. Tested to be selectively coordinated with the QO® family of miniature circuit breakers through 30 kA fault current, this solution provides peace of mind when power availability is critical.

An electronic trip unit provides adjustable long-time settings in four sensor sizes, allowing coverage from 60 A through 600 A on a 208Y/120 V system. In conjunction with the QO family of branch circuit breakers, the PowerPact D Mission Critical circuit breaker delivers full selective coordination downstream of Square D brand transformers ranging from 15 kVA to 300 kVA.

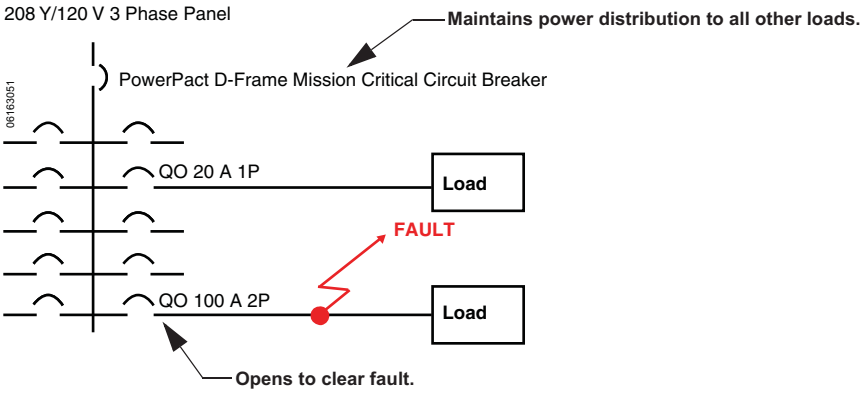

Ratings
UL 489 Listed
CSA Certified
Voltage: 208Y/120 V
Handle Ratings: 60–600 A
AIR: 65 kA

Available Configurations
• Four Sensor Sizes: 150, 250, 400 and 600 A
• Main circuit breaker in NQ panelboards
• Unit mount for OEM users
• Plug-in base for OEM users
• Drawout base for OEM users

In addition to unique design attributes, the D-frame Mission Critical circuit breakers have also undergone rigorous testing procedures to certify the coordination with downstream circuit breakers—combining innovative engineering with validated test results.

Apply Schneider Electric Mission Critical circuit breakers in emergency power distribution systems, data centers, hospitals, or anywhere continuity of service is desired.

Part numbers are derived as shown in Table 19 by selecting two variable components: termination type and sensor rating.

Table 19: Mission Critical Circuit Breaker Part Number

D	J	L	3	2	150	W	+ Accessories
D-Frame	Interrupting Rating 65 kA at 208Y/120 Vac	Termination Options A = I-Line ON end L = Lugs On/Off End M = Lugs On End P = Lugs off End F = Bus Bar S = Rear Connected N = Plug-in D = Drawout	Poles 3-Pole Only	Voltage 208Y/120 Vac only	Sensor Rating Amperage 150 = 60–150 A 250 = 100–250 A 400 = 160–400 A 600 = 240–600 A	Mission Critical	

© 2007–2010 Schneider Electric
All Rights Reserved

Theory of Operation

There are several dynamic forces between the D-frame Mission Critical and downstream circuit breakers during a fault occurring below the downstream circuit breaker. Many of these high short-circuit regions cannot be shown on the trip curve.

The D-frame Mission Critical circuit breakers use an energy-based tripping system to protect the circuit breakers while allowing the maximum selectivity with downstream circuit breakers. The trip units have a special selectivity delay to allow downstream circuit breakers to clear. However, on very high faults or if the downstream circuit breaker does not trip, the circuit breakers employ a piston-based tripping system that uses the energy (I^2t) pressure to open the mechanism.

1. At a very high level (about 25X the frame rating of the circuit breaker), the contacts begin to open due to magnetic fields pushing the contacts apart.
2. As the contacts part, arcing begins. As the energy increases, the pressure inside the arcing chamber increases.
3. At a preset pressure (depending on circuit breaker capability), a piston opens the mechanism to trip the circuit breaker.

This piston system is referred to as “reflex tripping” and is shown on page 63 of this catalog.

The combination of the D-frame Mission Critical and downstream circuit breakers shown in the selectivity charts in the instruction bulletin are selective due to the fact that the series impedance and the let-through from the downstream circuit breaker does not produce enough I^2t energy to trip the D-frame Mission Circuit circuit breaker.

This system maximizes the interaction of the circuit breakers in series to allow selectivity. See the trip unit drawing shown below.

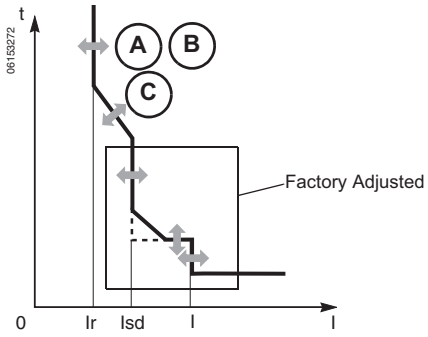

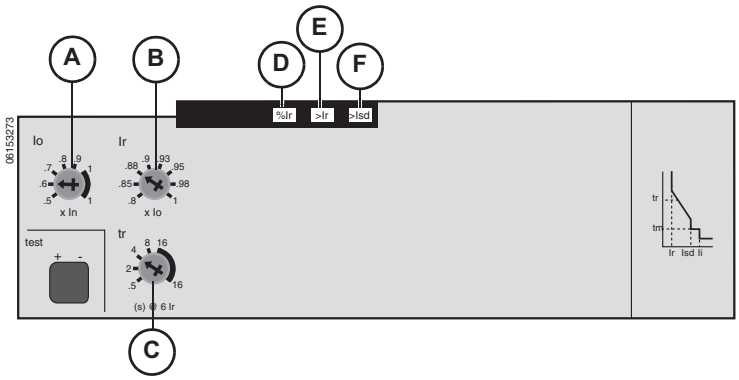

LSI Protection

A. Sensor (Io) switch sets sensor value for circuit breaker.
B. Long-time pickup (Ir) switch sets maximum current level (based on sensor setting Io) which circuit breaker will carry continuously without tripping.
C. Long-time delay (tr) switch sets time circuit breaker will carry an overcurrent above long-time pickup current level before tripping.

Indicator light

D. Load indication alarm
   —Lights at % of Ir pickup.
   —Flashes at 105% or more of Ir pickup.

Indicator LEDs

E. Overload indicator LED lights when circuit breaker trips due to overload (Ir) or abnormal component temperature. When lit at same time as short-circuit indicator light, indicates microprocessor malfunction.
F. Short-circuit indicator LED lights when circuit breaker trips due to short circuit (Isd) or instantaneous (Ii) faults. When lit at same time as overload indicator light, indicates microprocessor malfunction.

Fixed (Factory Adjusted) Settings

The following parameters are factory set to maximize selectivity, and cannot be adjusted by the user:

- Short time (Isd)
- Short-time delay
- Instantaneous (I)

© 2007–2010 Schneider Electric
All Rights Reserved

Section 5—Automatic Switches

D-frame circuit breakers are also available in an automatic molded case switch construction. Automatic switches are similar in construction to electronic trip circuit breakers, except that the switches open instantaneously at a factory-set, non-adjustable trip point calibrated to protect only the molded case switch itself. Because of their molded case construction, they are more compact than conventional disconnect switches and accept electrical accessories for added flexibility. (See Section 8—Accessories.)

Molded case switches are identical to molded case circuit breakers, except they are not equipped with thermal (overload) trip units. Molded case switches open when the handle is switched to the off position or in response to an auxiliary tripping device such as a shunt trip or an undervoltage release.

Molded case switches are intended for use as disconnect devices only. UL489 requires molded case switches to be protected by a circuit breaker or fuse of equivalent rating. Molded case switches are labeled with their appropriate withstand ratings. The withstand rating of a switch is defined as the maximum current at rated voltage that the molded case switch will withstand without damage when protected by a circuit breaker with an equal continuous current rating.

Table 20: Ratings and Interrupting Ratings

			400 A	600 A
Number of Poles			3, 4, 4P OSN[1]	3, 4
Rated Current (A)			400	600
UL 489 Ratings				
Rated Voltage (V)			600	600
IEC 60947-3 ratings				
Rated Insulation Voltage (V)			750	750
Rated Impulse Withstand Voltage (kV)			8	8
Rated Operational Voltage	Ue	AC 50/60 Hz	690	690
		DC	500	500
Rated Operational Current	Ie	AC 23A 690 V	400	630
		DC 23A 250 V	400	630
		DC 23A 500 V (2 poles in series)	400	630
Making Capacity (kA peak)			7.1	8.5
Short-Time Withstand Current (kA rms)	Icw	Icw (kA ms)	5	6
		Duration (s)	1	1

[1] Oversized Neutral Protection

These switches are suitable for use on a circuit capable of delivering not more than:

Table 21: Short-Circuit Withstand Current

Voltage	Short-Circuit Availability
240 Vac	150 kA
480 Vac	100 kA
600 Vac	25 kA

© 2007–2010 Schneider Electric
All Rights Reserved

Switches are Listed under UL file E103740 and Certified under CSA file LR88980.

Table 22: Switch Catalog Numbers

Ampere Rating	Poles[1]	J Interrupting		Terminal Kit (One Side)	Wire Range
		Cat. No.	Trip Point		
Unit-Mount Circuit Breakers					
400 A	3P	**DJL36000S40**	6000 A	32508	2 AWG–500 kcmil Al or 2 AWG–600 kcmil Cu
600 A		**DJL36000S60**	6000 A	32510	(2) 2/0 AWG–500 kcmil Al or (2) 2/0 AWG–350 kcmil Cu
400 A	4P	**DJL46000S40**	6000 A	M32509	2 AWG–500 kcmil Al or 2 AWG–600 kcmil Cu
600 A		**DJL46000S60**	6000 A	M32511	(2) 2/0 AWG–500 kcmil Al or (2) 2/0 AWG–350 kcmil Cu
400 A	4P OSN	**DJL56000S40**	6000 A	M32509	2 AWG–500 kcmil Al or 2 AWG–600 kcmil Cu
600 A		**DJL56000S60**	6000 A	M32511	(2) 2/0 AWG–500 kcmil Al or (2) 2/0 AWG–350 kcmil Cu
I-Line Circuit Breakers					
400 A	3P	**DJA34000S40**	6000 A	32508	2 AWG–500 kcmil Al or 2 AWG–600 kcmil Cu
600 A		**DJA34000S60**	6000 A	32510	(2) 3/0 AWG–500 kcmil Al/Cu

New!

1 4P circuit breaker available in plug-in, draw-out and rear-connected only. Availability of 4P bus-connected and lug configurations to be announced.

© 2007–2010 Schneider Electric
All Rights Reserved

Section 6—Motor Circuit Protectors

Motor Circuit Protectors

An instantaneous trip version of the PowerPact D-frame circuit breaker is also available for motor circuit protection. These motor circuit protectors comply with NEC requirements for providing short-circuit protection when installed as part of a Listed combination controller having motor overload protection.

Electronic trip motor circuit protectors are designed as disconnect devices for use in combination with motor starters. These motor circuit protectors provide short-circuit protection only and have an adjustable amperage pickup so they can be set to open instantaneously at current values slightly above the motor starting inrush current. This setting coordinates the pickup time-current response of the motor circuit protector with the overload relay of the motor starter to give the best possible protection.

Current interrupting ratings for these UL Recognized components are established in combination with motor starters and properly-sized overload relays and contactors.

Table 23: Motor Circuit Protector Ratings and Interrupting Ratings

Catalog Number				**DJL36400M36**	**DJL36600M42**
Rated Current	In	40°C		400 A	600 A
Number of Poles				3	3
UL 489 Ratings					
Rated Voltage (V)				600 A	600 A
Magnetic Trip Setting (5–10 Times Handle Rating)				2000–4000 A	3000–6500 A
IEC 60947-3 ratings					
Rated Insulation Voltage (V)	Ui			750	750
Rated Impulse Withstand Voltage (kV)	Uimp			8	8
Rated Operational Voltage	Ue	AC 50/60 Hz		690	690
		DC		500	500
Ultimate Breaking Capacity (kAIR)	Icu	AC 50/60 Hz	220/240 V	100	100 kAIR
			380/415 V	70	70
			440 V	65	65
			500 V	30	30
			525 V	35	35
			660/690 V	20	20
		DC	250 V (1P)	85	85
			500 V (2 poles in series)	85	85
Service Breaking Capacity	Ics	(% Icu)		100%	100%
Utilization Category				A	A

Table 24: Motor Circuit Protector Catalog Numbers[1]

Ampere Rating	Adjustable Trip Range	Catalog Number	Wire Range
400 A	2000–4000 A	**DGL36400M36**	2 AWG–500 kcmil Al or 2 AWG–600 kcmil Cu
600 A	3000–6000 A	**DGL36600M42**	(2) 3/0 AWG–500 kcmil Al/Cu
400 A	2000–4000 A	**DJL36400M36**	2 AWG–500 kcmil Al or 2 AWG–600 kcmil Cu
600 A	3000–6000 A	**DJL36600M42**	(2) 3/0 AWG–500 kcmil Al/Cu
400 A	2000–4000 A	**DLL36400M36**	2 AWG–500 kcmil Al or 2 AWG–600 kcmil Cu
600 A	3000–6000 A	**DLL36600M42**	(2) 3/0 AWG–500 kcmil Al/Cu

[1] Also available in I-Line®, plug-in, and drawout versions.

© 2007–2010 Schneider Electric
All Rights Reserved

Section 7—Circuit Breaker Mounting and Connections

Mounting Configurations

The PowerPact D-frame circuit breakers are available in a variety of configurations.

Table 25: Mounting Options

Termination Letter	Poles		Options Code Suffix
A = I-Line®	3 Pole Only	For factory-installed terminations, place termination letter in the third block of the circuit breaker catalog number. D G D 3 6 4 0 0 E 2 0 H J 0 0 Termination No. Options Code	(A, N, and D Terminations Only)
F = Bus Bar	3 Pole Only		H = Plug-In or Drawout
L = Lugs on Both Ends	3 Pole Only		J = No Stationary part
M = Lugs ON End	3 Pole Only		0 = No Switches
P = Lugs OFF End	3 Pole Only		0 = No Shutters
N = Plug-In	3 or 4 Pole		
D = Drawout	3 or 4 Pole		
S = Rear Connection	3 or 4 Pole		

Refer to circuit breaker installation bulletin before installing circuit breaker, accessories, or wiring.

Fixed Mounting

Mounting on Rails

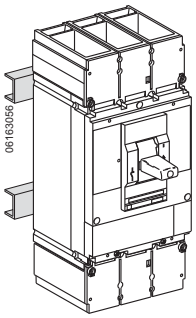

Mounting on Backplate

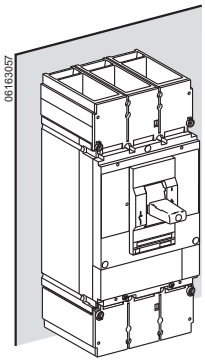

Flush Mounting

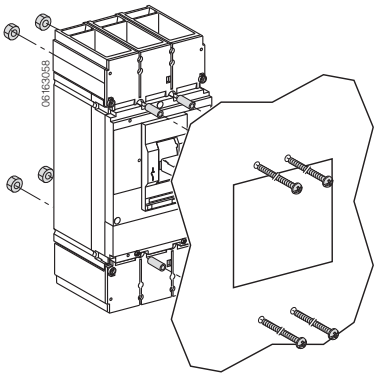

I-Line® Circuit breakers

New!

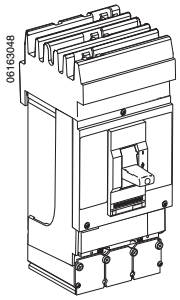

PowerPact D-frame circuit breakers are now available in I-Line construction for easy installation and removal in I-Line panelboards and switchboards.

I-Line circuit breakers use “blow-on” type line side connectors. In case of a short circuit, increased magnetic flux causes the plug-on connectors of the circuit breaker to tighten their grasp on the panelboard or switchboard bus bars. The I-Line connectors and circuit breaker mounting bracket are integral parts of I-Line circuit breakers and cannot be removed or replaced. I-Line circuit breakers come with mechanical load side lugs, or optional terminal nut to connect to bus bars or to compression (crimp) lugs.

Table 26: Phase Options—Example: DGA34150( )

Phase Option Number	Phase Connection	Example
Standard	ABC	**DGA34150**

© 2007–2010 Schneider Electric
All Rights Reserved

Mounting through Front Panel

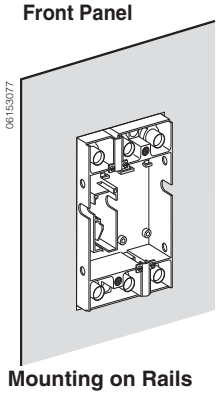

Mounting on Rails

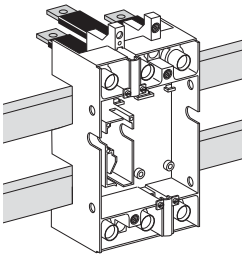

Plug-In Mounting

The plug-in configuration makes it possible to:

- Extract and/or rapidly replace the circuit breaker without having to touch connections
- Allows for addition of future circuits at a later date

When the circuit breaker is in the connected position, the primary voltage is fed through the circuit breaker by means of multiple finger disconnects. Control voltage of internal accessories is provided through secondary disconnects.

To create a plug-in configuration on a fixed-mounted circuit breaker requires:

- A set of power and secondary disconnects that are added to the circuit breaker
- A plug-in kit
  - — A plug-in base for mounting through a front panel or on rails
  - — A safety trip installed on the circuit breaker, which causes automatic tripping if the circuit breaker is ON before engaging it or withdrawing it; the safety trip does not prevent circuit breaker operation, even when the circuit breaker is disconnected
  - — Mandatory short terminal shields

The plug-in mounting is Listed under UL file E113555 and Certified under CSA file LR 69561.

Drawout Mounting

The chassis is made up of two side plates installed on the plug-in base and two other plates mounted on the circuit breaker.

The drawout mounting provides all of the functions of the plug-in base, plus:

- Disconnected position—the power circuit is disconnected, the circuit breaker is simply withdrawn and may still be operated (on, off, push-to-trip)
- Circuit breaker may be locked using 1 to 3 padlocks—diameter 0.19 to 0.31 inch (5–8 mm)—to prevent connection
- Auxiliaries can be tested using manual auxiliary connector

Drawout mounting is on a backplate:

- Through a front panel or on rails
- Horizontally or vertically

Accessories for drawout circuit breakers:

- *Auxiliary switches* for installation on the fixed part of the chassis, indicating the “connected” and “disconnected” position
- *Toggle collar* for circuit breakers with toggle through front panel, intended to maintain he degree of protections whatever the position of the circuit breakers (supplied with a toggle extension)
- *Keylock* which, depending on the bolt fitted, can be used to
  - — Prevent insertion for connection
  - — Lock the circuit breaker in the connected or disconnected position
- *Telescopic shaft* for extended rotary handles
- *Control voltage,* which is provided through automatic secondary disconnect in the connected position only. See Section 7 for more details. Electrical accessories can be tested in the disconnected position with an external wiring harness.

The drawout-mounted chassis is listed under UL file E113555 and certified under CSA file LR69561.

© 2007–2010 Schneider Electric
All Rights Reserved

Plug-In Mounting and Drawout Mounting

Plug-In Mounting

Drawout Mounting

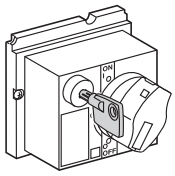
Locking Device

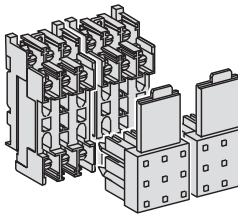
Disconnecting Blocks

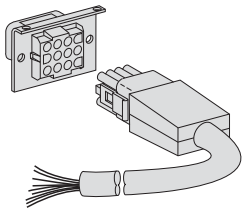
Manual Auxiliary Connector

Used for connection of bus bars or cables with compression lugs. The rear connections are installed flat. The plug-in base or the chassis is mounted through a front panel.

Accessory circuits exit the circuit breaker via one to three secondary disconnecting blocks (nine wires each). Circuit breaker connection wires for the options installed with trip unit STR53UP exit via the automatic secondary disconnecting blocks. These are made up of:

- A moving part connected to the circuit breaker via a support (one support per circuit breaker)
- A fixed part mounted on the plug-in base, equipped with connectors for wire up to 14 AWG (2.5 mm^2)

For test purposes, circuit breakers may be equipped with one to three manual auxiliary connectors, which allow the auxiliaries to remain connected when in the “disconnected” position.

Table 27: Plug-In and Drawout Mountings for D-Frame Circuit Breakers

Description			Factory-Installed Suffix	Field-Installed Kit No.	
			3P and 4P	3P	4P
Plug-In Mounting = Bus Bar Connection + Plug-In Kit					
Kit (Stationary and Moving Part)			N (Termination)	**32546**	**M32547**
Consisting Of:	Stationary Part	Plug-In Base	—	**32514**	**M32515**
	Moving Part	Moving Part of Chassis	HJ00 (With N termination, to order moving parts only)	—	—
		Short Terminal Covers		**32562**	**32563**
		Safety Trip Interlock		**32500**	**32520**
		Power Connections		3X **32518**	4X **32518**
Drawout Mounting = Bus Bar Connection + Drawout Kit					
Kit (Stationary and Moving Part)			D (Termination)	**32548**	**M32549**
Consisting Of:	Stationary Part	Plug-In Base	—	**32514**	**M32515**
		Fixed Part of Chassis	—	**32532**	**32532**
	Moving Parts	Moving Part of Chassis	HJ00 (With D termination, to order moving parts only)	**32533**	**32533**
		Short Terminal Covers		**32562**	**32563**
		Safety Trip Interlock		**32520**	**32520**
		Power Connections		3X **32518**	4X **32518**
Plug-In and Drawout Accessories					
Secondary Disconnecting Blocks[1]	Fixed Part	9-Wire Connector	—	**29273**	
	Moving Part	9-Wire Connector	—	**32523**	
		Support for 3 Moving Connectors	—	**32525**	
Manual Auxiliary Connector	9-Wire Connector for Disconnected Operation		—	**29272**	
Shutter	Two Shutters for Plug-In Base		—	**32521**	
Classic Accessories	Extended Escutcheon for Toggle		—	**32534**	
	Locking Device (Key Lock is Not Included)		—	**29286**	
	Two Position Indicating Switches (Connected/Disconnected)		—	**29287**	

[1] Included when electrical accessories are factory installed.

© 2007–2010 Schneider Electric
All Rights Reserved

Connection

All D-frame circuit breakers are suitable for reverse feeding.

Front Connection

Cable connectors bolt onto the circuit breaker terminals or the terminals of the plug-in base.

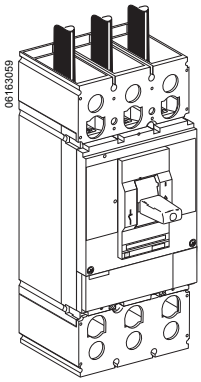

Table 28: D-frame Lug Information

Lug [1]	Circuit Breaker	Rating	Conductor			Catalog No.	
			Type	Qty.	Size Stranded Only	3P Kit	4P Kit[2]
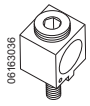 06163036	Unit Mount (ON and OFF ends) I-Line (OFF end)	≤400 A	Al	1	2 AWG–500 kcmil (35–240 mm^2)	**AL400L61K3**	**AL400L61K4**
			Cu	1	2 AWG–600 kcmil (35–300 mm^2)		
			Cu	1	2 AWG–600 kcmil (35–300 mm^2)	**CU400L61K3**	**CU400L61K4**
			Al	1	2 AWG–500 kcmil (35–240 mm^2)	**32508**	—
			Cu	1	2 AWG–600 kcmil (35–300 mm^2)		
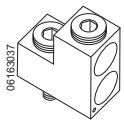 06163037	Unit Mount (ON and OFF ends)	600 A	Al	2	2/0 AWG–500 kcmil (70–240 mm^2)	**AL600LS52K3**	**AL600LS52K4**
			Cu	2	2/0 AWG–350 kcmil (70–185 mm^2)		
			Cu	2	2/0 AWG–350 kcmil (70–185 mm^2)	**CU600LS32K3**	**CU600LS32K4**
			Al	2	2/0 AWG–500 kcmil (70–240 mm^2)	**32510**	—
			Cu	2	2/0 AWG–350 kcmil (70–185 mm^2)		
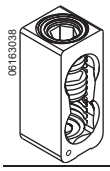 06163038	I-Line (OFF end)	600 A	Al	2	3/0 AWG–500 kcmil (95–240 mm^2)	**AL600LF52K3**	**AL600LF52K4**
			Cu	2	3/0 AWG–500 kcmil (95–240 mm^2)		
			Cu	2	3/0 AWG–500 kcmil (95–240 mm^2)	**CU600LF52K3**	**CU600LF52K4**
Control Tap Takeoff (Kit of 2)						**29348**	**29348**
Compression Lug						future	future

1 For control wire installation, use an 8-32 x 1/4 in. screw (not provided) into tapped control wire hole in lower left hand corner of lug.

2 Use 4-pole kit and terminal shield for UL508 applications only (do not use for UL489 applications).

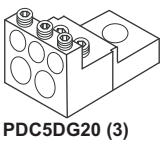
PDC5DG20 (3)

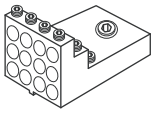
PDC12DG4 (3)

Table 29: Power Distribution Connectors

Description	Circuit Breaker Ampere Rating	(Wires per Terminal) Wire Range Cu or Al	Catalog Number	
			Qty. per Kit	Kit Number
Power Distribution Connector	150–600 A	(3) 14–2 AWG + (2) 14–2/0 AWG (5 total)	3	**PDC5DG2** [1]
	150–600 A	(12) 14 AWG	3	**PDC12DG4** [1]
Terminal Shield	Use with Power Distribution Connectors		1	**36965**

1 Kit includes terminal shield.

Compression (Crimp) lugs - future

© 2007–2010 Schneider Electric
All Rights Reserved

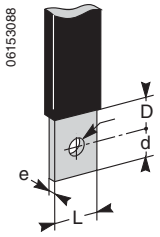

Bus Bar Connection

D-frame circuit breakers are equipped as standard with captive nuts and screws for direct connection to bus bars.

Table 30: Bus Bar Connection

Screw Size	Pole Pitch	L	d	D	e	e
M10	1.8 in. (45 mm)	1.3 in. (32 mm)	0.64 in. (16 mm)	< 0.51 in. (13 mm)	0.11–0.39 in. (3–10 mm)	< 0.4 in. (10 mm)

Table 31: Bus Bar Connections Hardware

Description	Term. No.	Poles	Cat. No.
Set of 3 terminal screws and washers for one side.	F	3	**36966**
Set of 4 terminal screws and washers for one side.		4[1]	**36967**

[1] Use 4-pole terminal shield for UL508 applications only (do not use for UL489 applications).

Rear Connection

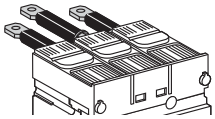

For connection of bus bars or cables with compression lugs. Rear connections are easily installed on the circuit breaker terminals. The same connection may be installed flat, edgewise or at a 45° angle. All combinations are possible. The circuit breaker is mounted on a backplate.

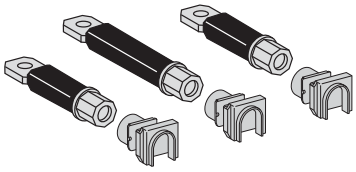

One Long + Two Short

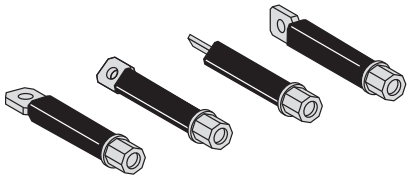

Four Positions

Table 32: Rear Connections (Bus Bar Connection + Rear Connection Kit)

Description		Catalog No.	
		3P	4P
Consisting of:	Short Rear Connections (Two Sets of Two)	**32475**	**32475**
	Long Rear Connections (Two Sets of Two)	**32476**	**32476**
	Short Terminal Covers	**32562**	**32563**

Interphase Barriers

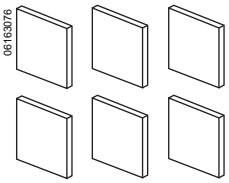

Table 33: Phase Barriers

Used With	Description	Cat. No.	Qty Per Kit
Phase Barriers		29329	6

© 2007–2010 Schneider Electric
All Rights Reserved

Section 8—Accessories

Electrical Accessories General Information

Location

Internal accessories comply with requirements of Underwriters Laboratories Inc. UL 489 and Canadian Standard Association C22.2 No. 5.1. All internal accessories are Listed for Fixed installation per UL file E103955 and Certified under CSA file LR 69561.

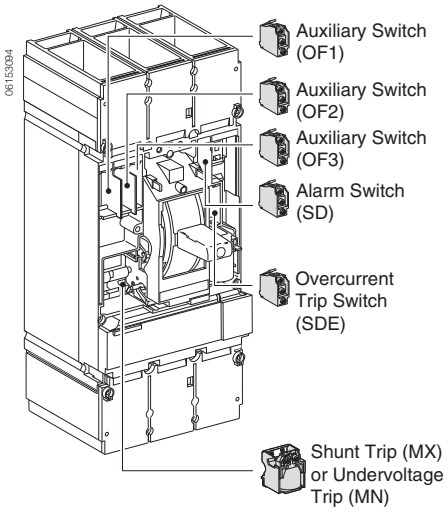

Connections

Each electrical accessory is fitted with numbered terminal blocks for wires with the following maximum size:

- 16 AWG (1.5 mm^2) for auxiliary switches, undervoltage and shunt trip or undervoltage trip
- 14 AWG (2.5 mm^2) for the motor operator

Auxiliary Wiring

Wiring for auxiliary circuits exit the device through a knock-out in the front cover.

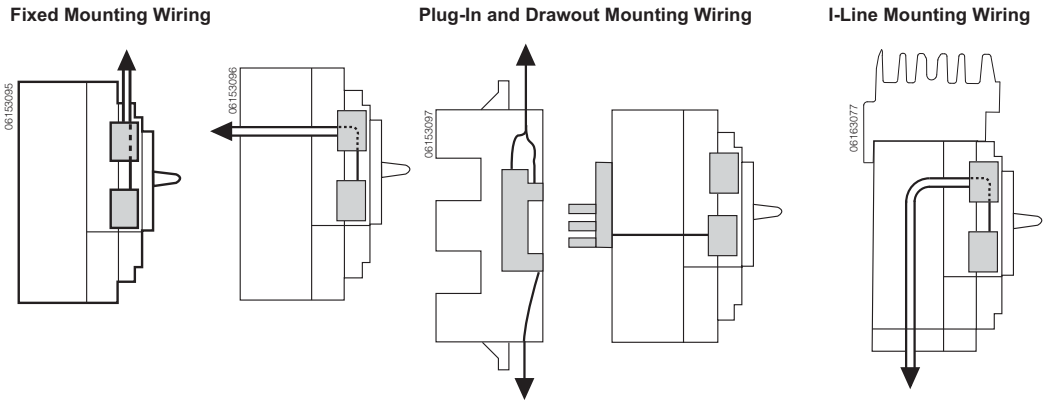

© 2007–2010 Schneider Electric
All Rights Reserved

Auxiliary and Alarm Switches

Auxiliary switches provide remote information of the circuit breaker status and can thus be used for indications, electrical locking, relays, etc.

Table 34: Auxiliary and Alarm Switches

Applications	**Open/Closed (OF) Auxiliary Switch** • Indicates the position of the circuit breaker contacts **Trip Indication (SD) Switch** • Bell alarm indicates that the circuit breaker has tripped due to an overload, short circuit or ground fault, the operation of a shunt trip or undervoltage trip or the “push-to-trip” button • Resets when the circuit breaker is reset **Overcurrent Trip Switch (SDE)** • Indicates that the circuit breaker has tripped due to an overload, short circuit or ground fault • Resets when the circuit breaker is reset The above auxiliary switches are also available in low-level versions (with gold flash plating) capable of switching very low loads (e.g., for controlling PLCs or electronic circuits) **Rotary Handle Indicator: CAO (early-break) and CAF (early-make)** • Fitted in the rotary handle module (see page 40)
Installation & Connection	• The OF, SD and SDE switches snap into cavities behind the front accessory cover of the circuit breaker • One model serves for all indication functions depending on where it is fitted in the circuit breaker. • The SDE function of a circuit breaker equipped with a thermal-magnetic trip unit requires the SDE actuator.
Standards	• The internal accessories comply with requirements of Underwriters Laboratories® Inc. (UL®). • UL 489 and Canadian Standard Association C22.2 No. 5-02 Standards. • All internal accessories are Listed for field installation per UL file E103955 and Certified under CSA file LR 69561. • Auxiliary switches comply with UL 489, CSA C22.2 No. 5-02 and IEC 60947-5 Standards. “Low-level” switches are not UL Recognized.

Table 35: Electrical Characteristics

Characteristic	Voltage		Standard	Low-Level
Supplied as Standard (Form C)			4	4
Maximum Number of Contacts			4	4
Breaking Capacity at a Power Factor (p.f.) of 0.3	Standard (100 mA/24 V minimum load)			
	Vac	240/380 Vac	6 A	5 A
		480 Vac	6 A	5 A
		600/690 Vac	6 A	—
	Vdc	24/48 Vdc	2.5 A	2.5 A
		240 Vdc	0.5 A	0.8 A
		380 Vdc	0.3 A	0.3 A
	Low-level (1 mA/4 V minimum load with a maximum current and voltage of 100 mA 10 V.			
	NOTE: If the maximum voltage and current is exceeded, the low-level function of the switch will be lost but the switch will continue to function as a standard switch with the following specifications.			
	Vac	24/48 Vac	5 A	—
		240 Vac	5 A	—
		380 Vac	5 A	—
	Vdc	24/48 Vdc	5/2.5 A	—
		125 Vdc	0.5 A	—
		250 Vdc	0.3 A	—

Table 36: Auxiliary Switch Catalog Numbers

Contacts	Factory-Installed Suffix	Field-Installable Kit No.	
1A/1B Standard	AA		**S29450**
2A/2B Standard	AB	**(2)**	**S29450**
1A/1B Low-Level (Gold)	AE		**S29482**
2A/2B Low-Level (Gold)	AF	**(2)**	**S29482**

© 2007–2010 Schneider Electric
All Rights Reserved

Table 37: Alarm/Overcurrent Trip Switch Catalog Numbers

Switch	Factory-Installed Suffix	Field-Installable Kit No.
Alarm Switch (SD)	BC	**S29450**
Alarm Switch (SD) Low-Level	BH	**S29452**
SDE Standard	BD	**S29450 + S29451**
SDE Low-Level	BJ	**S29452 + S29451**
SD and SDE Standard	BE	**S29450 (2) + S29451**
SD and SDE Low-level	BK	**S29452 (2) + S29451**

Shunt Trip (MX) and Undervoltage Trip (MN) Switches

A voltage release can be used to trip the circuit breaker via a control signal.

Table 38: Shunt Trip and Undervoltage Trip Switches

Applications	**Shunt Trip (MX)** • Trips the circuit breaker when the control voltage rises above 70% of its rated voltage • Impulse type ≥ 20 ms or maintained control signals • AC shunt trips are suitable for ground-fault protection when combined with a Class I ground-fault sensing element **Undervoltage Trip (MN)** • Trips the circuit breaker when the control voltage drops below a tripping threshold • Drops out between 35% and 70% of the rated voltage • Circuit breaker closing is possible only if the voltage exceeds 85% of the rated voltage • Permanent type • If an undervoltage condition exists, operation of the closing mechanism of the circuit breaker will not permit the main contacts to touch, even momentarily. This is commonly called “Kiss Free”
Installation and Connection	• Accessories are common to D-frame circuit breakers and snap into cavities under the front accessory cover of the circuit breaker • Each terminal may be connected by one 18–14 AWG (1.0–2.5 mm^2) stranded copper wire
Operation	• The circuit breaker must be reset locally after being tripped by shunt trip or undervoltage trip (MN or MX) • MN or MX tripping has priority over manual (or motor operator) closing; in the presence of a standing trip order such an action does not result in any closing, even temporarily, of the main contacts • Endurance: 50% of the rated mechanical endurance of the circuit breaker

Table 39: Electrical Characteristics

		AC	DC
Rated Voltage (V)		24, 48, 110–130, 208–277, 380–480, 525, 600	12, 24, 30, 48, 60, 125, 250
Consumption	Pickup (MX)	< 10 VA	< 5 W
	Seal-in (MN)	< 5 VA	< 5 W
Clearing Time (ms)		< 50	< 50

Table 40: Shunt Trip and Undervoltage Trip Suffix Codes and Kit Numbers

Voltage	Shunt Trip (MX)		Undervoltage Release UVR (MN)	
	Factory-Installed Suffix	Field-Installable Kit No.	Factory-Installed Suffix	Field-Installable Kit No.
24 Vac	SK	**S29384**	UK	**S29404**
48 Vac	SL	**S29385**	UL	**S29405**
120 Vac	SA	**S29386**	UA	**S29406**
208-277 Vac	SD	**S29387**	UD	**S29407**
380-480 Vac	SH	**S29388**	UH	**S29408**
525-600 Vac	SJ	**S29389**	UJ	**S29409**
12 Vdc	SN	**S29382**	UN	**S29402**
24 Vdc	SO	**S29390**	UO	**S29410**
30 Vdc	SU	**S29391**	UU	**S29411**
48 Vdc	SP	**S29392**	UP	**S29412**
60 Vdc	SV	**S29383**	UV	**S29403**
125 Vdc	SR	**S29393**	UR	**S29413**
250 Vdc	SS	**S29394**	US	**S29414**

© 2007–2010 Schneider Electric
All Rights Reserved

Motor Operator

The motor operator remotely operates the circuit breaker featuring easy and sure operation:

- All circuit breaker indications and information remain visible and accessible, including trip unit settings and circuit breaker connection
- Suitability for isolation is maintained and padlocking remains possible
- Double insulation front face
- All terminations except I-Line®

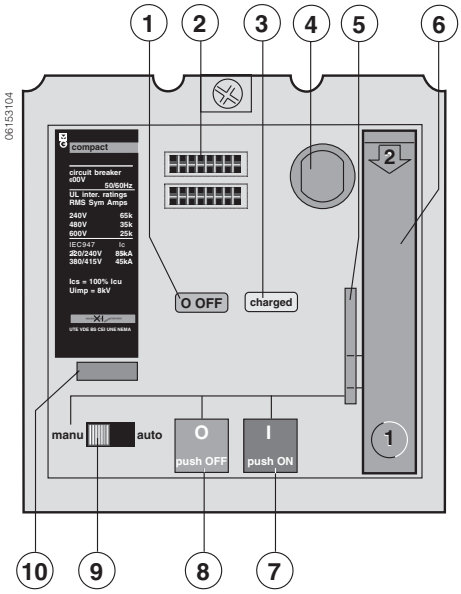

1. Contact position indicator (suitability for isolation)
2. Outgoing circuit identification labels
3. Spring status indicator (charged, discharged)
4. Locking device (keylock)
5. Locking device (off position) using one to three padlocks, diameter 0.2–0.32 in. (5–8 mm), not supplied
6. Manual spring-charging handle
7. ON push button
8. OFF push button
9. Manual/auto mode selection switch; the position of the switch can be indicated remotely
10. Operation counter

Table 41: Motor Operator

Applications	• Local motor-driven operation, centralized operation, automatic distribution control • Normal/standby source changeover or switching to a replacement source to optimize energy costs • Load shedding and reconnection to optimize energy costs • Synchro-coupling—less than five cycle closing time
Installation and Connection	• All installation (fixed, plug-in/drawout mounting) and connection capabilities are maintained except I-Line • Connections of the motor operator module are to a built-in terminal block behind its front cover • Stranded copper wire 14 AWG (2.5 mm^2)
Automatic Operation	The motor operator is connected in series with the overcurrent (SDE) trip switch. See wiring diagrams on page 47. • ON and OFF by two impulse type or continuous control signals • Depending on the wiring, resetting can be done locally, remotely or automatically • Mandatory manual reset following tripping due to an electrical fault (with SDE)
Manual Operation	• Transfer to manual mode with possibility of remote mode indication • ON and OFF by two push buttons • Recharging of stored-energy system by pumping the lever nine times • Padlocking in off position

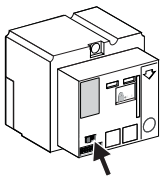

Manual Mode Switch

Table 42: Motor Operator Characteristics

Response Time (ms)	Opening		< 500
	Closing		< 80
Maximum Cycles Per Minute			4
Consumption	AC (VA)	Opening/Closing	500
	DC (W)	Opening/Closing	500
Minimum Operating Order (ms)			700
Operating Voltage			85–110% rated

© 2007–2010 Schneider Electric
All Rights Reserved

Table 43: Motor Operator and Accessory Suffix Codes and Catalog Numbers

Device	Control Voltage	Factory-Installed Suffix	Field-Installable Kit No.	
			400 A	600 A
Motor Operator	48/60 Vac	ML	**32639**	**32839**
	110/130 Vac	MA	**32640**	**32840**
	20/277 Vac	MD	**32641**	**32841**
	380/415 Vac	MF	**32642**	**32842**
	440/480 Vac	MH	**32647**	**32847**
	24/30 Vdc	MO	**32643**	**32843**
	48/60 Vdc	MP	**32644**	**32844**
	110/130 Vdc	MR	**32645**	**32845**
	250 Vdc	MS	**32646**	**32846**
Mounting Hardware	—	—	**32649**	**32649**
Ronis Lock	—	—	**41940**	**41940**
Profalux Lock	—	—	**42888**	**42888**
Operations Counter	—	—	**32648**	**32648**

Rotary Operating Handles

Directly Mounted Rotary Operating Handles

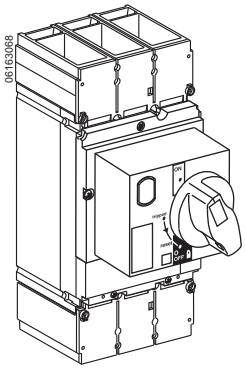

Directly Mounted Rotary Operating Handle

Installation	The directly mounted rotary operating handle replaces the circuit breaker front accessory cover (secured by screws).
Operation	The direct rotary handle maintains: • Suitability for isolation • Indication of three positions: I (ON), Tripped and O (OFF) • Access to the “push-to-trip” button • Visibility of, and access to, trip unit settings • The circuit breaker may be locked in the OFF position by using one to three padlocks (not supplied), padlock shackle diameter 0.19–0.31 in. (5–8 mm) 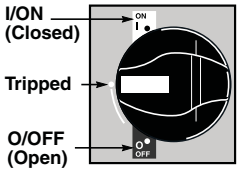
Models	• Standard with black handle • VDE type with red handle and yellow bezel for machine tool control
Variations	Accessories transform the standard direct rotary handle for the following situations: • Motor control centers (MCCs): – Opening of door prevented when circuit breaker is on – Closing of circuit breaker inhibited when door is open • Machine tool control; complies with CNOMO E03.81.501N; degree of protection IP54 • Early make or early break contacts may be installed into direct mount rotary handle
Standards	The directly-mounted rotary operating handle is UL Listed under file E103955 and CSA Certified under file LR 69561

Table 44: Directly-Mounted Rotary Operated Handles

Device		Factory-Installed Suffix	Field-Installable Kit Number
Direct Mounted	Standard Handle Black	RD12	**32597**
	Red handle on yellow bezel	RD22	**32599**
	MCC Conversion Accessory	—	**32606**

© 2007–2010 Schneider Electric
All Rights Reserved

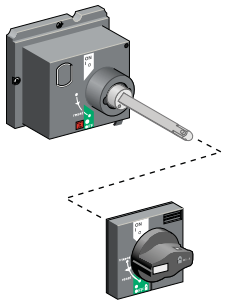

Door Mounted Rotary Operating Handle

Table 45: IEC Door-Mounted Rotary Operating Handle

Installation	The extended rotary operating handle is made up of: • A unit that replaces the front accessory cover of the circuit breaker (secured by screws) • An assembly (handle and front plate) on the door that is always secured in the same position, whether the circuit breaker is installed vertically or horizontally • An adjustable extension shaft • The handle mechanism can be used in NEMA 3R and 12 enclosure applications
Operation	The door mounted operating handle makes it possible to operate circuit breakers installed in enclosure from the front. The door mounted operating handle maintains: • Suitability for isolation • Indication of the three positions I/ON, Tripped, O/OFF • Visibility of and access to trip unit settings when the door is open • Degree of protection: IP40 as per IEC 529 Defeatable interlock prevents opening of door when circuit breaker is on The circuit breaker may be locked in the O/OFF position by using one to three padlocks, padlock shackle diameter 0.19–0.31 in. (5–8 mm); padlocks are not supplied; locking prevents opening of the switchboard door
Shaft Length	The shaft length is the distance between the back of the circuit breaker and the door: • Minimum shaft length is 7.4 (185 mm) • Maximum shaft length is 24 in. (600 mm) • Extended shaft length must be adjusted
Models	• Standard with black handle • VDE type with red handle and yellow bezel for machine tool control
Variations	For withdrawable configurations, the extended rotary handle is also available with a telescopic shaft containing two stable positions.
Standards	The extended rotary operating handle is UL Listed under file E103955 and CSA Certified under file LR 69561

Table 46: Extended Door-Mounted Rotary Operating Handles

Device		Description	Factory-Installed Suffix	Field-Installable Kit Number
Door Mounted Handle		Standard black handle	RE12	**32598**
		Red handle on yellow bezel	RE22	**32600**
Rotary Handle Replacement Kit			—	**S33875**
Telescoping			RT12	**32603**
Accessories	Key lock adapter		—	**32604**
	Key locks	Ronis 1351.500	—	**41940**
		Profalux KS5 B24 D4Z	—	**42888**
	Indication Auxiliary Switch	One early-break switch	—	**32605**
		Two early-make switches	RE13	**29346**

NEMA Door Mounted Rotary Operating Handles (Not Shown)

Table 47: NEMA Door-Mounted Rotary Operating Handles

Installation	The extended rotary operating handle is made up of: • A mounting plate that provides a rotary actuator for a standard toggle circuit breaker • Handle assemblies available for NEMA 3, 3R, 4, and 4X • Available in standard or short (3 in.) handle assemblies
Operation	The door mounted operating handle makes it possible to operate circuit breakers installed in enclosure from the front. Provides ON and OFF indication The circuit breaker may be locked in the off position
Mounting Depth	The mounting depth is the distance between the back of the circuit breaker and the door: • Minimum mounting depth is 5.5 in. (138 mm) • Maximum mounting depth is 10.75 in. (273 mm) with standard shaft • Maximum mounting depth is 21.3 in. (543 mm) with long shaft

© 2007–2010 Schneider Electric
All Rights Reserved

Table 48: NEMA Door-Mounted Rotary Operated Handles

Handle Type	Poles	Operating Mechanism Included in Kit	Mounting Depth Min–Max	Kit Number
Painted 6 in.	3	9421LS8 and 9421LC46	7-1/4 to 12-1/16 in. (184 to 306 mm)	**9421LD1**
		9421LS13 and 9421LH46	7-1/4 to 22-5/8 in. (184 to 575 mm)	**9421LD4**

Class 9422 Cable Operating Handle

Flange-mounted Handle Cable Operating Mechanism

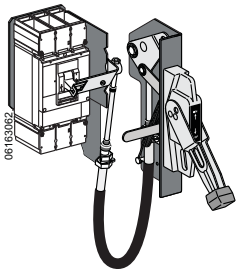

Applications	• The cable operator maintains: Suitability for isolation Indication of three positions: I/ON, Tripped, O/OFF Access to push-to-test • The circuit breaker may be locked in the O/OFF position by one to three padlocks • Door can be locked closed due to interlocking features of the handle operator
Installation	• Handle is mounted on flange of enclosure using specified mounting dimensions while circuit breaker and operating mechanism are mounted to inside of enclosure using two screws • Cable lengths available in 3-, 5- or 10-foot lengths to accommodate a variety of mounting locations. Handles are available in painted NEMA 1, 3, 3R, 4 (sheet steel) and 12 ratings or chrome (NEMA 4, 4x)

Table 49: Cable Operating Mechanism and A1 Handles

Description		Kit Number
Cable Length (in./mm)	36/914	**9422CSJ30**
	60/1524	**9422CSJ50**
	120/3048	**9422CSJ10**
A1 painted flange handle		**9422A1**
Operating Mechanism Only		**9422RSI**

Class 9422 Flange-Mounted Variable-Depth Operating Mechanism

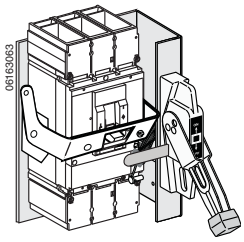

Designed for installation in custom-built control enclosures where main or branch circuit protective devices are required. All circuit breaker operating mechanisms are suitable for either right- or left-hand flange mounting, convertible in the field.

Table 50: Cable Operating Mechanism and A1 Handles

Description	Depth	Kit Number
Variable Depth Mechanism	9.00–17.75 in. (229–451 mm)	**9422RSI**

Handle Extension

Designed to extend the circuit breaker handle for easier manual circuit breaker operation.

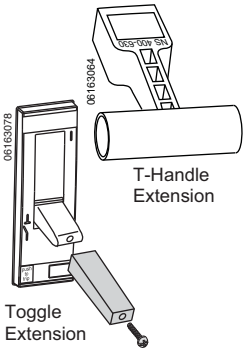

Table 51: Handle Extensions

Description	Kit Number
T-Handle Extension (Temporary)	**32595**
Toggle Extension (Fixed)	**32553**

© 2007–2010 Schneider Electric
All Rights Reserved

Locking Systems

Padlocking systems can receive up to three padlocks with diameters ranging from 0.19–0.31 inch (5–8 mm); padlocks not supplied.

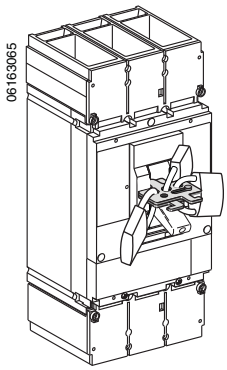

Removable Attachment*

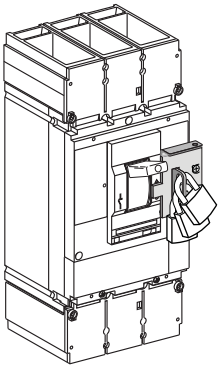
Fixed Padlock Attachment

Table 52: Device Locking Options

Control Device	Function	Type	Accessories Required	Kit Number
Toggle	Lock in OFF Position	Padlock	Removable Device	**S29370**
	Lock in ON or OFF Position	Padlock	Stationary Device[1]	**S32631**
	Lock in OFF Position	Padlock	Stationary Device	**NJPAF**
Direct Rotary Handle	Lock in OFF Position	Padlock	None	—
Extended Rotary Operating Handle	Lock in OFF Position, Door Opening Prevented	Padlock	None	—
Motor Operator	Lock in OFF Position, Motor	Padlock	None	—

1 Not available for 2-pole HD and HG devices

Interlocking Accessories

Interlocking prevents simultaneous closing of two circuit breakers.

Table 53: Interlocking Accessories

Accessory	Means	Kit Number
Toggle	Sliding Bar Interlocking Mechanical Device	**32614**
Rotary Handle (Directly or Door Mounted)	Mechanical Interlocking with 2 Keylocks and 1 Key	**32621**

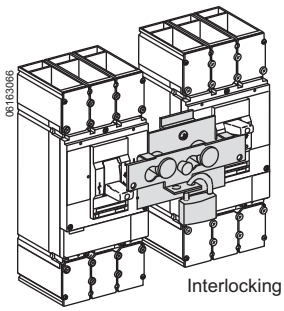

Interlocking with Toggle Control

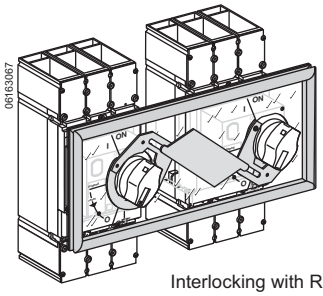

Interlocking with Rotary Handles

Interlocking Circuit Breakers with Padlocks

Available for three-pole or four-pole circuit breakers.

Padlocking systems can receive one or two padlocks, shank diameter of 0.19–0.31 in. (5–8 mm). Both interlocked circuit breakers should be fixed version or plug-in version.

Two sliding interlocking bars can be used to interlock three circuit breakers installed side-by-side, in which case one circuit breaker is in the on position and the two others are in the off position.

Device	Description	Catalog No.
Handle Padlocking	Removable (Lock OFF Only)	S29370
	Fixed (Lock OFF or ON)	S32631
	Fixed (Lock OFF Only)	NJPAF
Interlocking (Not UL Listed)	Mechanical for circuit breakers with rotary handles	32621
	Mechanical for circuit breakers with toggle handles	32614

© 2007–2010 Schneider Electric
All Rights Reserved

Interlocking with Keys

For circuit breakers equipped with rotary handles or a motor operator. Interlocking with keys may be easily implemented by equipping each of the circuit breakers, either fixed or drawout mounted, with a directly mounted rotary operating handle and a standard keylock, with only one key for the two keylocks. This solution enables interlocking between two circuit breakers that are geographically distant or that have significantly different characteristics.

Use:

- A keylock adapter (one required for each circuit breaker)
- Two identical keylocks with a single key

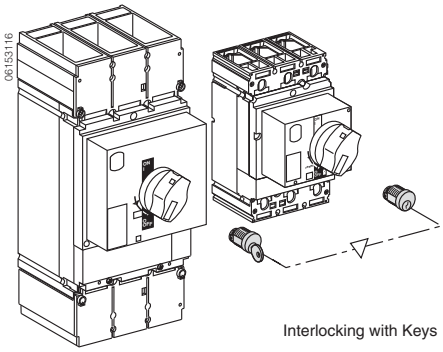

Interlocking with Keys

Key Lock Adapter[1]		**32604**
Key Locks	Ronis® 1351.500	**41940**
	Profalux® KS5 B24 D4Z 2 lock	**42878**
	Profalux® KS5 B24 D4Z 1 lock	**42888**

[1] The key lock adapter is required for either Ronis or Profalux key lock installation.

Sealing Accessory

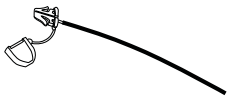

Sealing accessory kit includes the elements required to fit seals to prevent:

- Front accessory cover removal
- Rotary handle removal
- Opening of the motor operator
- Access to accessories
- Access to trip unit settings
- Access to ground-fault protection settings
- Trip unit removal
- Terminal cover removal
- Access to power connections

Order kit number **MICROTUSEAL** .

© 2007–2010 Schneider Electric
All Rights Reserved

Front-Panel Escutcheons

For Fixed or Plug-In Mounting

Door escutcheon provides better appearances of the door contact:

- Front-panel escutcheons for toggle handles secures to the panel from the front
- Front-panel escutcheons for motor-operated or rotary-operating handle secures to the panel by four screws from the front

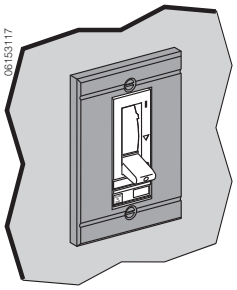

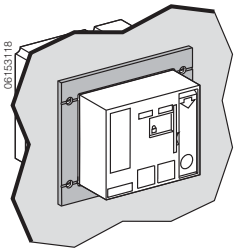

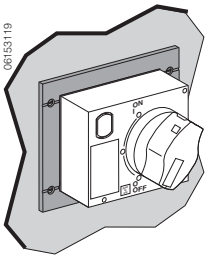

Table 54: Front-Panel Escutcheons

Description	Kit Number
Front Panel Escutcheon for Toggle Circuit Breakers	**32556**
Front Panel Escutcheon for Rotary Handle, Motor Operator or Extended Escutcheon	**32558**

Handle Extensions

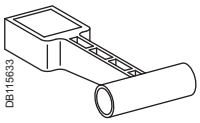

Table 55: Cable Operating Mechanism and A1 Handles

Description		Kit Number
T-Handle Extension		**32595**
Toggle Extension	1 per kit	**32553**

Toggle Boot

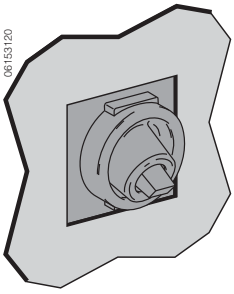

- Protection up to NEMA 3R
- Fits on front of circuit breaker
- Catalog number **32560**

© 2007–2010 Schneider Electric
All Rights Reserved

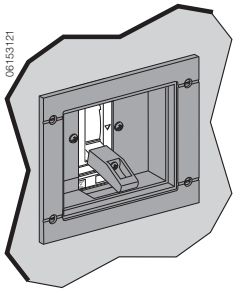

Toggle Collars (For Drawout Mounting)

Toggle collars make it possible to maintain degrees of protection regardless of the circuit breaker position (connected, disconnected):

- Front panel escutcheons are required (identical to those for rotary handle and ammeter module)
- Toggle collars are secured by two screws on the circuit breaker
- Front panel escutcheons are secured on the switchboard
- Toggle extension is supplied with the toggle collar
- Catalog number **32534**

Front panel escutcheons for motor operator, rotary operating handles are the same as for the fixed-mounted circuit breaker with the same equipment.

Outgoing Circuit Identification

Circuit breakers come with labels designed for handwritten indications.

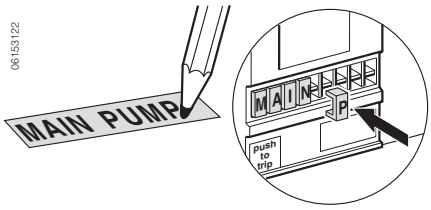

It is also possible to use preprinted, sixteen character Telemecanique® labels, order kit number **AB1** .

© 2007–2010 Schneider Electric
All Rights Reserved

Section 9—Wiring Diagrams

Circuit Breaker Wiring Diagrams

Auxiliary Devices		
AX / OF	Auxiliary Contact	18–14 AWG (1–2 mm^2)
AL / SD	Alarm Switch	
UVR / MN	Undervoltage Trip	
SHT / MX	Shunt Trip	
OAL / SDE	Overcurrent Trip Switch	

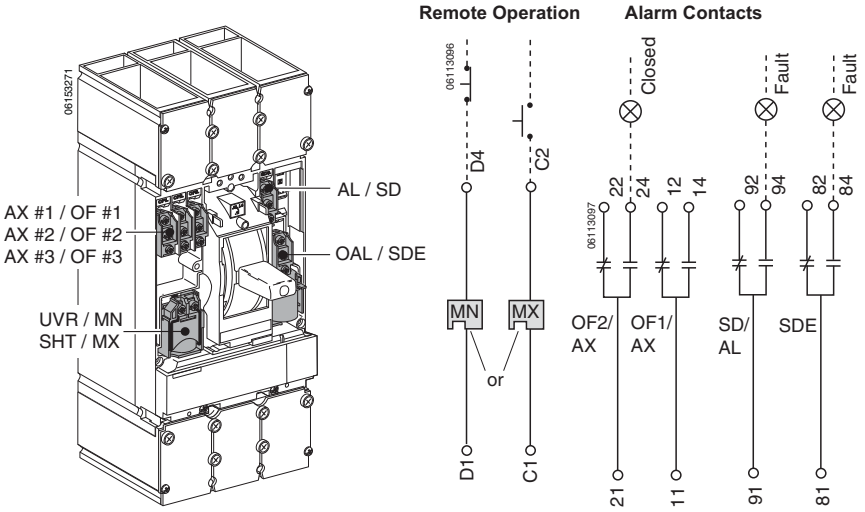

Standard Motor Operator Wiring (Factory Wiring Configuration)

A circuit breaker may be configured for remote operations. Remotely operated circuit breakers are factory wired for the power supply to the motor being switched by the overcurrent trip switch. This prevents the circuit breaker from being remotely reset after an overload fault as a precaution against closing on a fault.

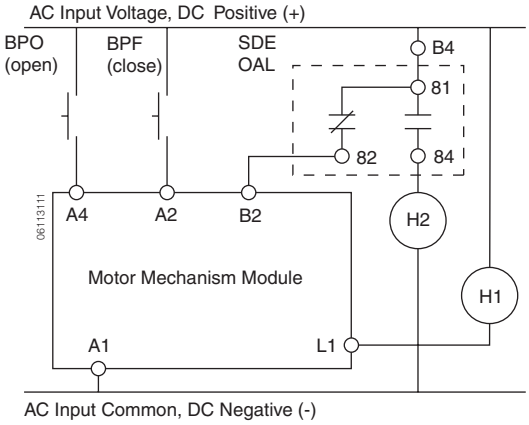

Terminal		Description
Connector	A4	Electrical opening (positive DC)
	A2	Electrical closing (positive DC)
	B4	Power supply connection (positive DC)
	A1	Power supply connection (negative DC)
	L1	Automatic position indicator
	84	Overcurrent trip indicator
Indicator	H1	Lamp signal indicating MCH in automatic position
	H2	Lamp signal indicating overcurrent trip condition

© 2007–2010 Schneider Electric
All Rights Reserved

Remote Reset Wiring Without Overcurrent Trip Switch Protection

To configure circuit breaker for remote operation without overcurrent switch protection, follow the wiring diagram below.

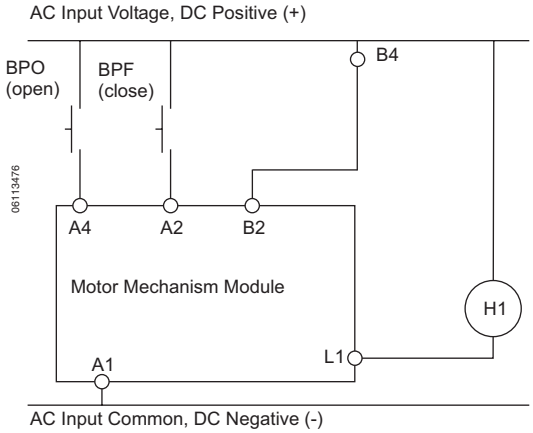

© 2007–2010 Schneider Electric
All Rights Reserved

Section 10—Dimensions

Fixed Mounted Circuit Breakers

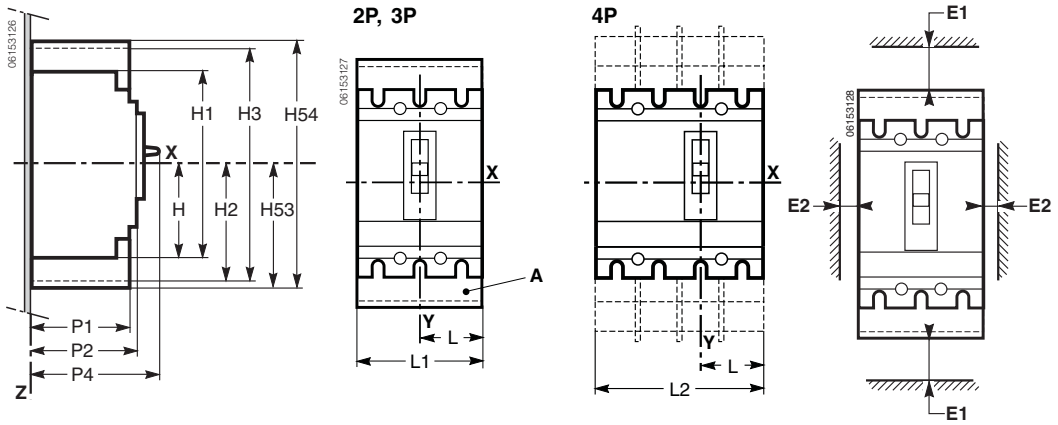

	H	H1	H2	H3	H53	H54	K1	L	L1	L2	P1	P2	P4	E1	E2
inch	5.01	10.03	5.61	11.22	6.69	13.38	45	2.75	5.51	7.28	3.75	4.33	6.61	1.38	0.4
mm	127.5	255	142.5	285	170	340	1.77	70	140	185	95.5	110	168	35	10

Mounting

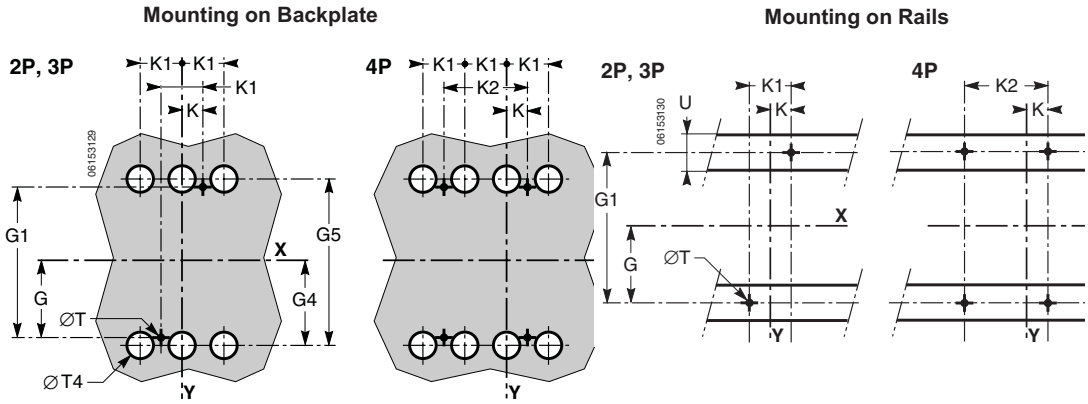

	G	G1	G4	G5	K	K1	K2	T	T4[1]	U[2]
inch	3.93	7.87	4.46	8.93	0.88	1.77	3.54	0.23	1.25	1.25
mm	100	200	113.5	227	22.5	45	90	6	32	32

1 For rear connected circuit breakers only.

2 U is ≤ 78 in. (20 mm) on C-frame circuit breakers with secondary disconnecting blocks.

© 2007–2010 Schneider Electric
All Rights Reserved

Front Panel Cutouts for Fixed or Plug-In Circuit Breakers

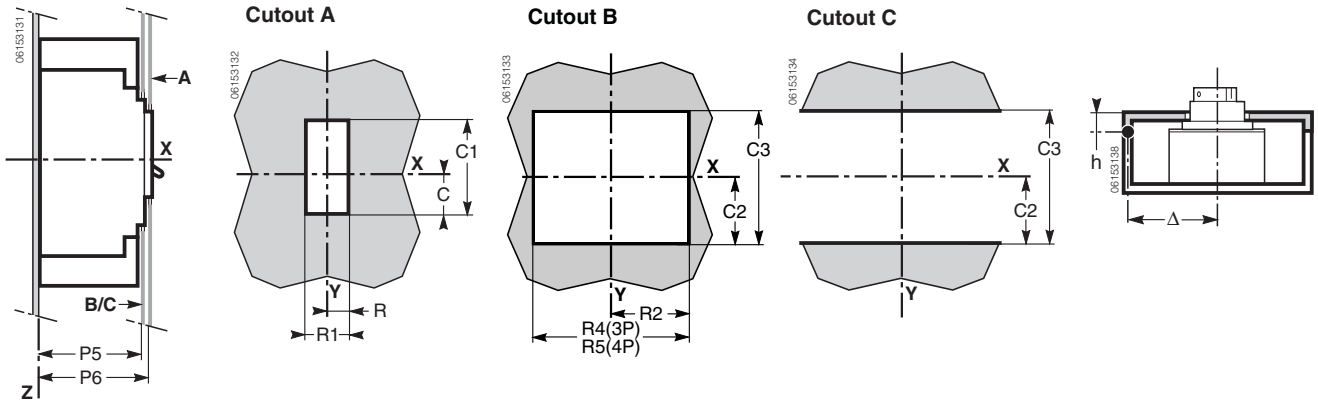

	C	C1	C2	C3	P5	P6	R	R1	R2	R4	R5	Δ
inch	1.63	4.56	3.64	7.24	4.21	4.40	1.24	2.48	2.81	5.62	7.40	3.93 + (5 x h)
mm	41.5	116	92.5	184	107	112	31.5	63	71.5	143	188	100 + (5 x h)

Front Panel Cutouts for Toggle Boot and Escutcheon

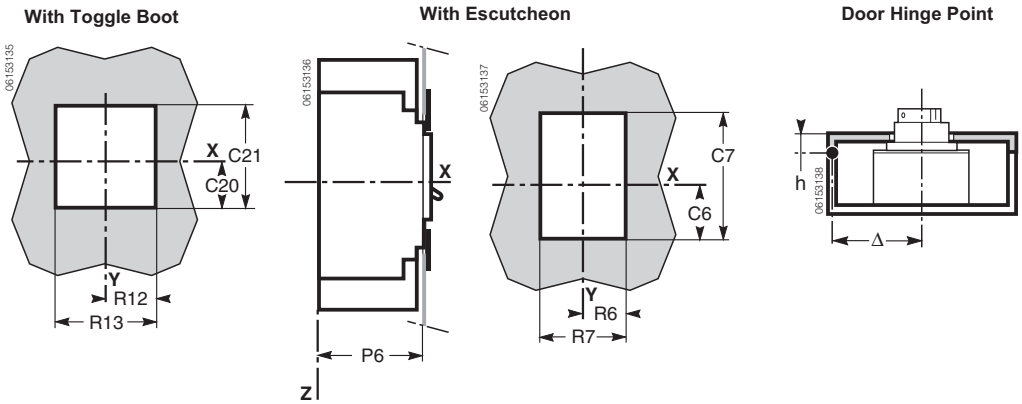

	C6	C7	C20	C21	P6	R6	R7	R12	R13	Δ
inch	2.08	5.74	1.83	1.83	4.40	1.83	3.66	2.48	4.96	3.93 + (5 x h)
mm	53	146	46.5	46.5	12	46.5	93	63	126	100 + (5 x h)

© 2007–2010 Schneider Electric
All Rights Reserved

Plug-In and Drawout Mounting

Plug-In (On Base)

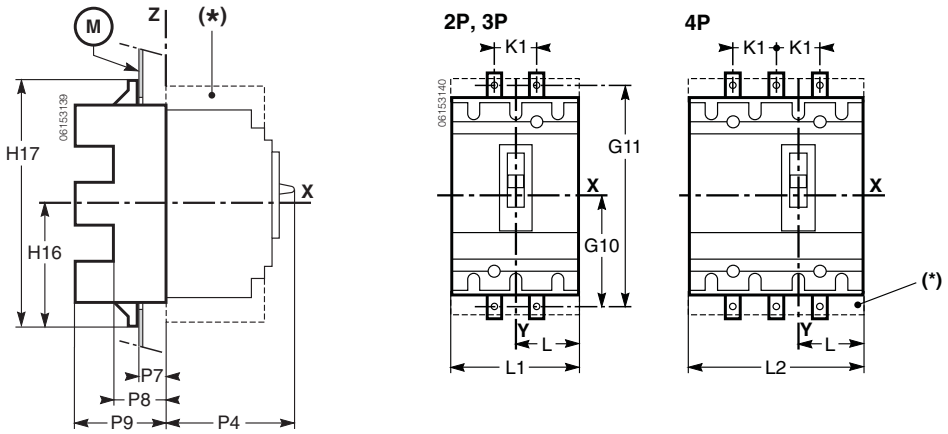

	G10	G11	H16	H17	K1	L	L1	L2	P4	P7	P8	P9
inch	5.90	11.8	6.20	12.40	1.77	2.75	5.51	7.28	6.61	1.06	1.77	3.93
mm	150	300	157.5	315	45	70	140	185	168	27	45	100

Drawout (On Chassis)

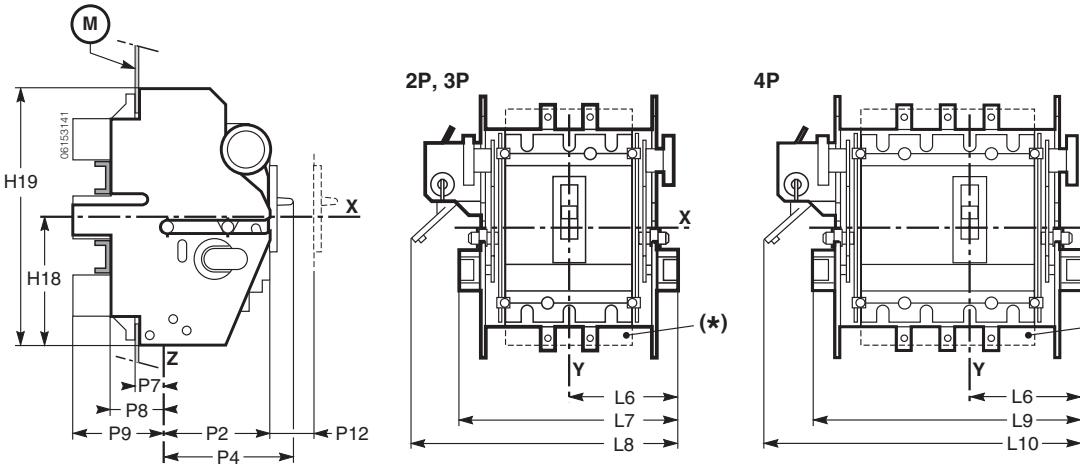

	H18	H19	L6	L7	L8	L10	P2	P4	P7	P8	P9	P12
inch	5.51	11.02	4.33	8.66	98.46	11.61	4.33	6.61	1.06	1.77	3.93	1.25
mm	140	280	110	220	250	295	110	1.68	27	45	100	32

© 2007–2010 Schneider Electric
All Rights Reserved

Mounting Through a Backplate

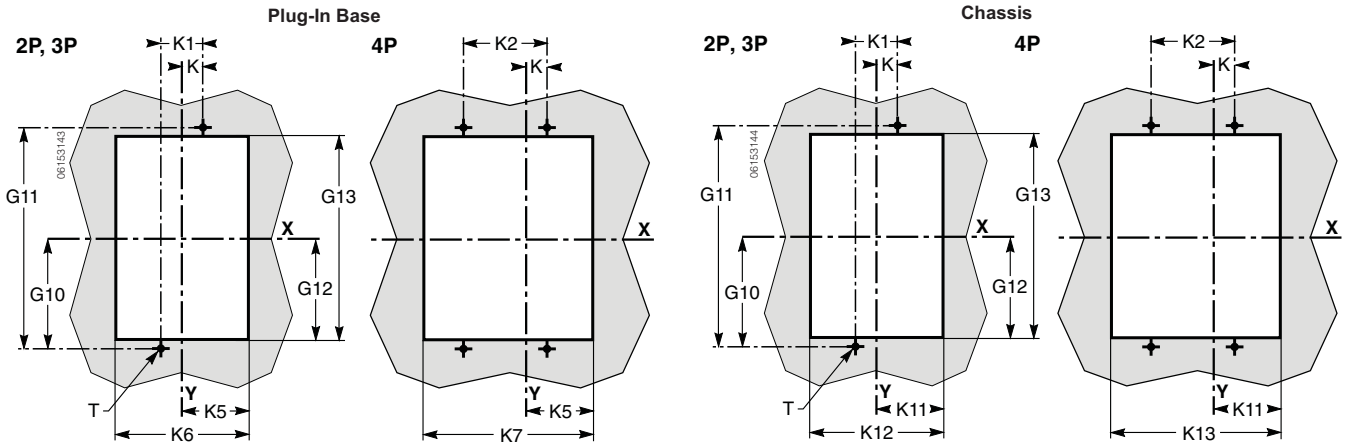

	G10	G11	G12	G13	K	K1	K2	K5	K6	K7	K11	K12	K13
inch	5.90	11.8	5.39	10.7	0.88	1.77	3.54	2.81	2.81	7.4	7.40	3.60	7.20
mm	150	300	137	274	22.5	45	90	71.5	143	188	91.5	183	91.5

Mounting on Rails (Plug-In Base or Chassis)

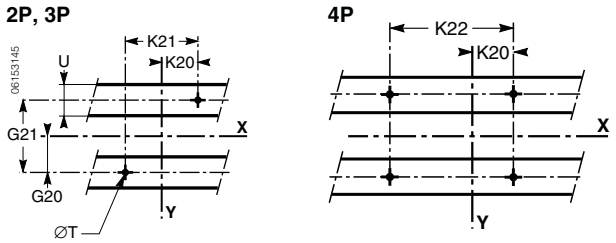

	G20	G21	K20	K21	K22	T
inch	2.95	5.90	8.97	1.96	5.71	0.11
mm	75	150	50	100	145	3

Front-Panel Cutouts

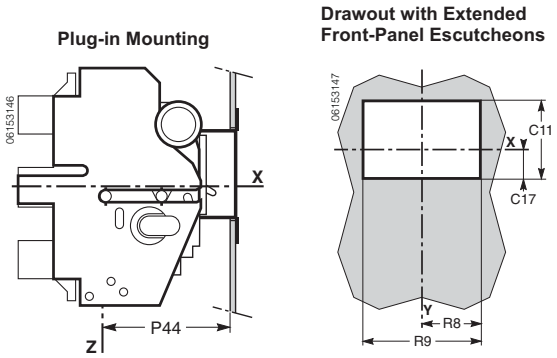

	C11	C17	P44	R8	R9
inch	6.10	1.65	5.78	3.54	7.08
mm	115	42	147	90	180

© 2007–2010 Schneider Electric
All Rights Reserved

Motor Operators

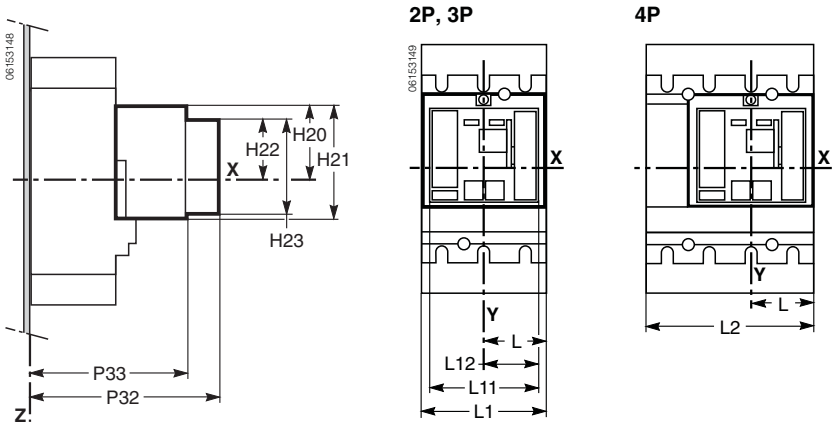

	H20	H21	H22	H23	L	L1	L2	L11	L12	P32	P33
inch	3.93	5.98	3.26	4.84	2.75	5.51	7.28	4.84	2.42	9.84	8.46
mm	100	152	83	123	70	140	185	123	61.5	250	215

Front-Panel Cutouts

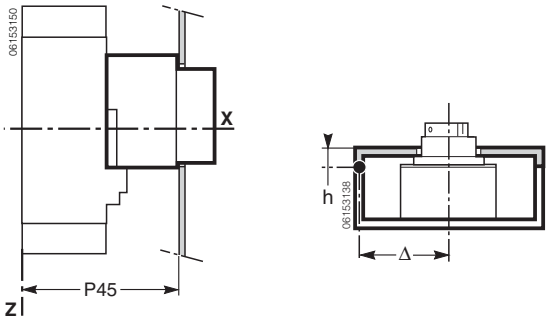

	C22	C23	P45	R14	R15	Δ
inch	1.63	4.96	8.54	2.53	5.08	3.93 + (5 x h)
mm	41.5	126	217	64.5	129	100 + (5 x h)

© 2007–2010 Schneider Electric
All Rights Reserved

Cable-Operating Handles

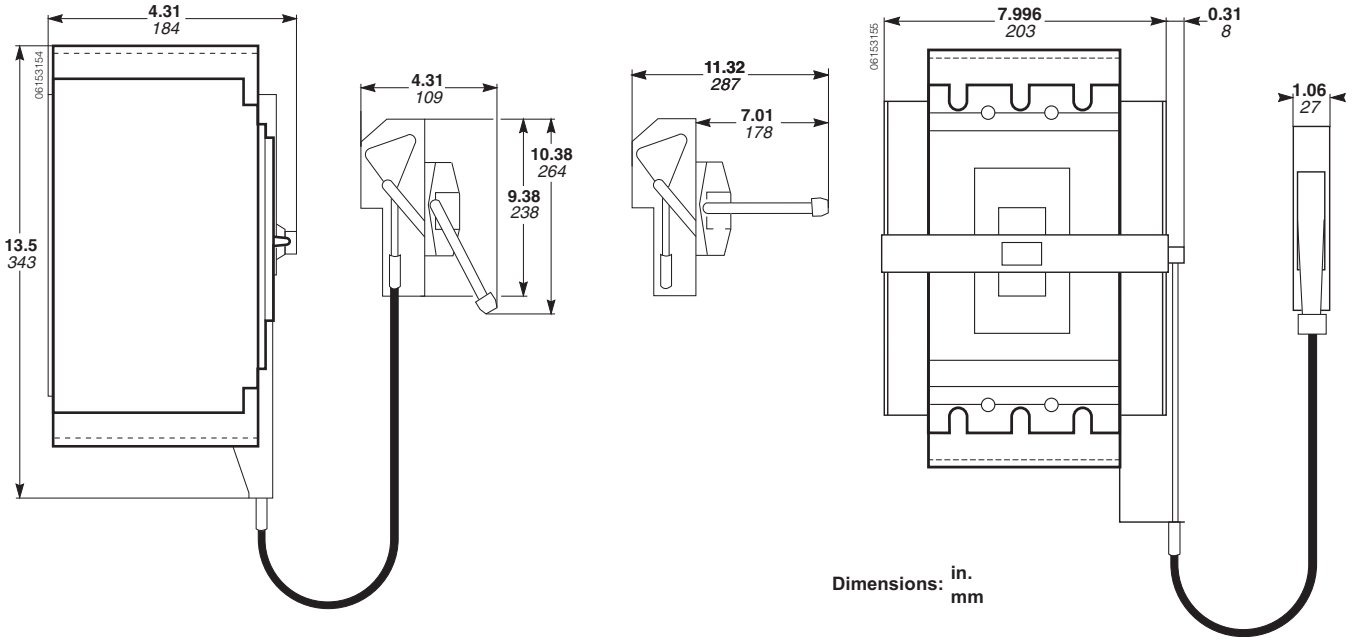

Rotary-Operating Handles

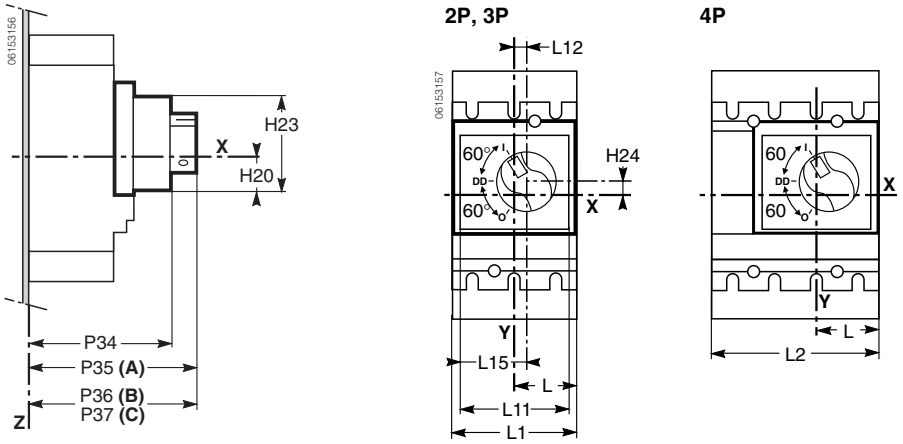

	H20	H23	H24	L	L1	L2	L11	L12	L15	P34	P35	P36	P37
inch	1.47	4.84	0.96	2.75	5.51	7.28	4.84	0.19	2.61	5.70	7.80	7.08	7.40
mm	40	123	24.5	70	140	185	123	5	66.5	145	180	180	188

© 2007–2010 Schneider Electric
All Rights Reserved

Front-Panel Cutouts

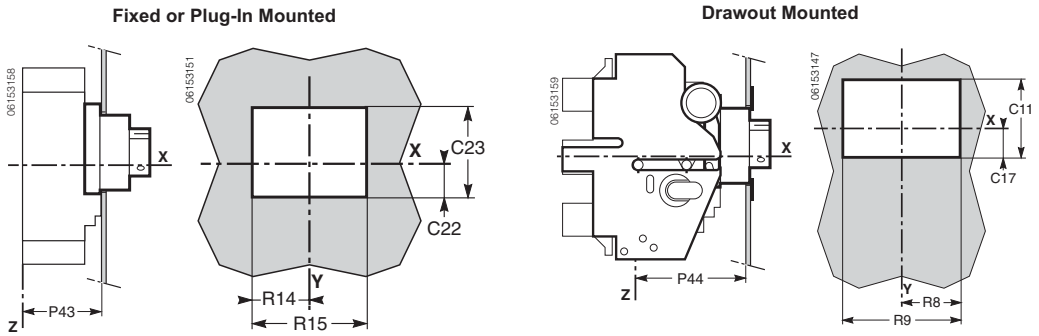

	C11	C17	C22	C23	P43	P44	R8	R9	R14	R15
inch	6.10	1.65	1.63	4.96	4.40	5.78	3.54	7.08	2.53	5.07
mm	155	42	41.5	1.26	112	147	90	180	64.5	129

Motor-Control Center-Type Direct Rotary-Operating Handle

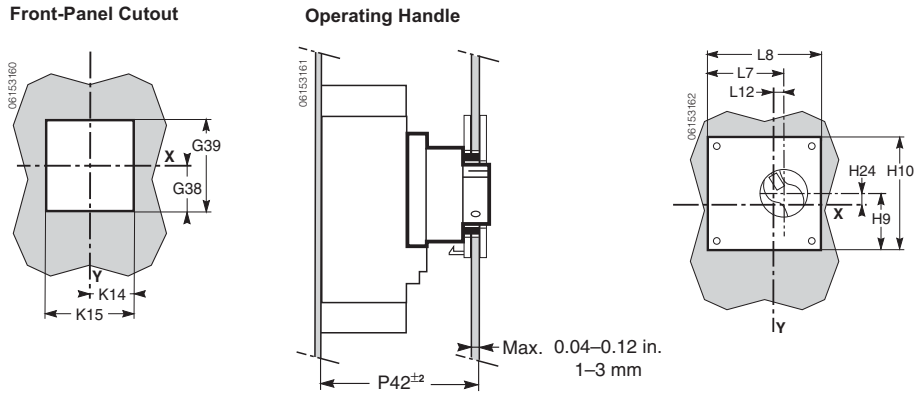

	G38	G39	H9	H10	H24	K14	K15	L7	L8	L12	P42
inch	2.00	5.70	3.26	6.29	0.96	2.85	5.70	3.34	6.29	0.19	5.86
mm	51	145	83	160	24.5	72.5	145	85	160	5	149

© 2007–2010 Schneider Electric
All Rights Reserved

Mounting

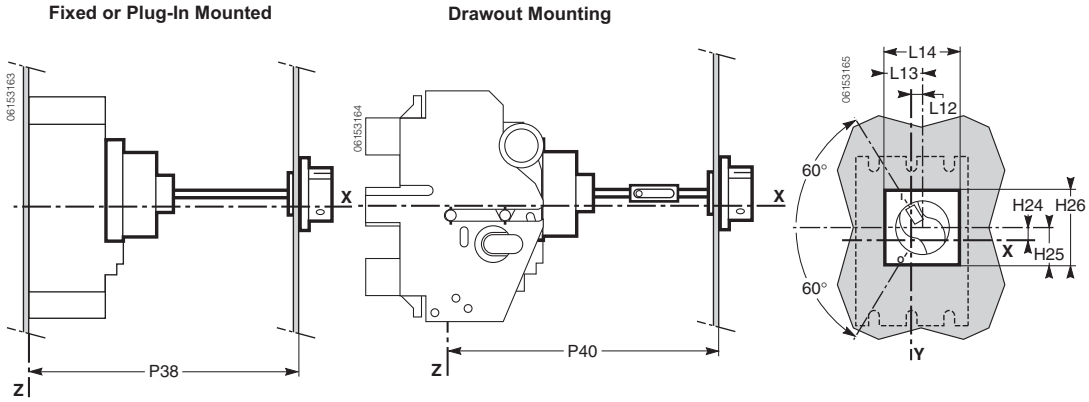

	H24	H25	H26	L12	L13	L14	P38	P40
inch	0.96	1.47	2.95	0.19	1.47	2.95	8.22–23.6	10.7–23.6
mm	24.5	34.5	75	5	37.5	75	209–600	272–600

Front-Panel Cutout

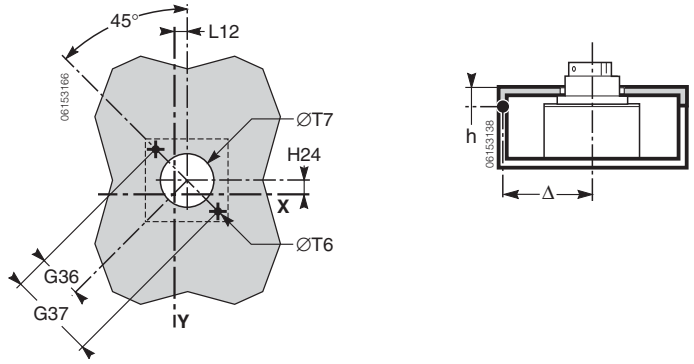

	G36	G37	H24	L12	T6	T7	Δ
inch	1.41	2.83	0.96	0.19	0.16	1.96	3.93 + (5 x h)
mm	36	72	24.5	5	4.2	50	100 + (5 x h)

© 2007–2010 Schneider Electric
All Rights Reserved

Motor-Control Center-Type Direct Rotary-Operating Handle

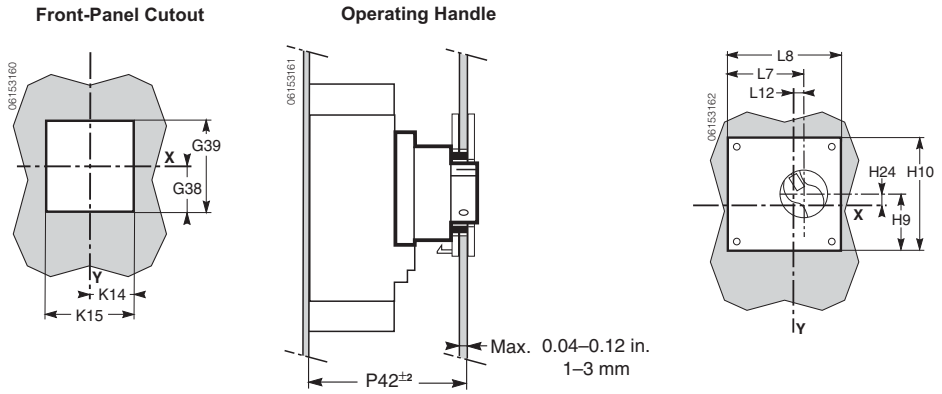

	G38	G39	H9	H10	H24	K14	K15	L7	L8	L12	P42
inch	2.00	5.70	3.26	6.29	0.96	5.70	5.70	3.34	6.29	0.19	5.86
mm	51	145	83	160	24.5	145	145	85	160	5	149

Front Accessories

Extended Escutcheons

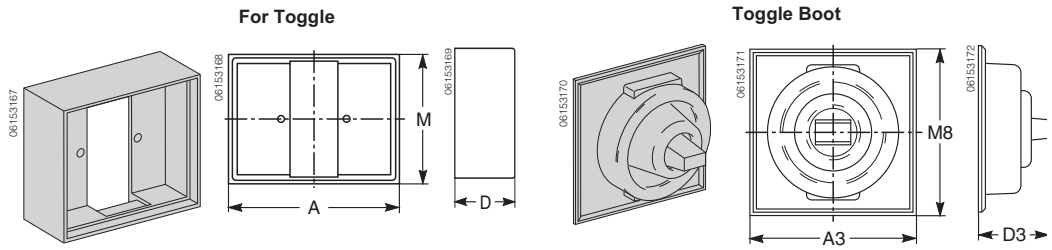

	A	A3	D	D3	M	M8
inch	4.84	1.37	5.27	2.36	4.84	5.27
mm	123	35	134	60	123	134

Front-Panel Escutcheons

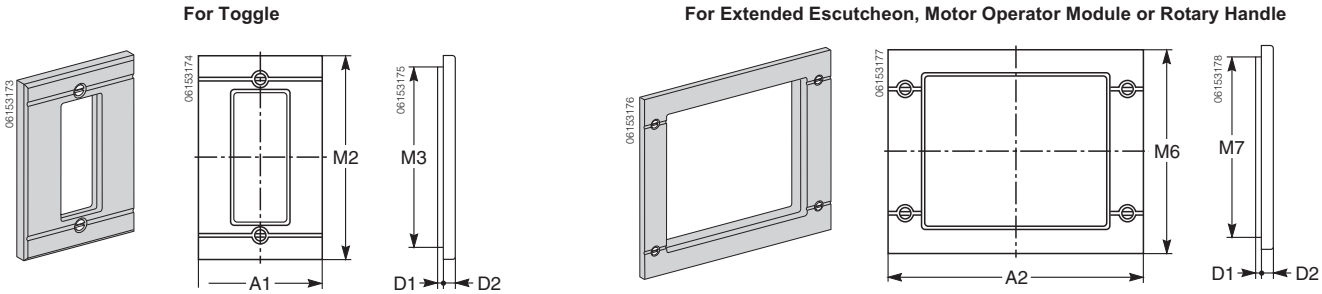

	A1	A2	D1	D2	M6	M7
inch	4.01	7.44	0.13	0.25	6.45	5.94
mm	102	189	3.5	6.5	164	151

© 2007–2010 Schneider Electric
All Rights Reserved

Interlocking Systems

Interlocking Systems with Rotary-Operating Handles

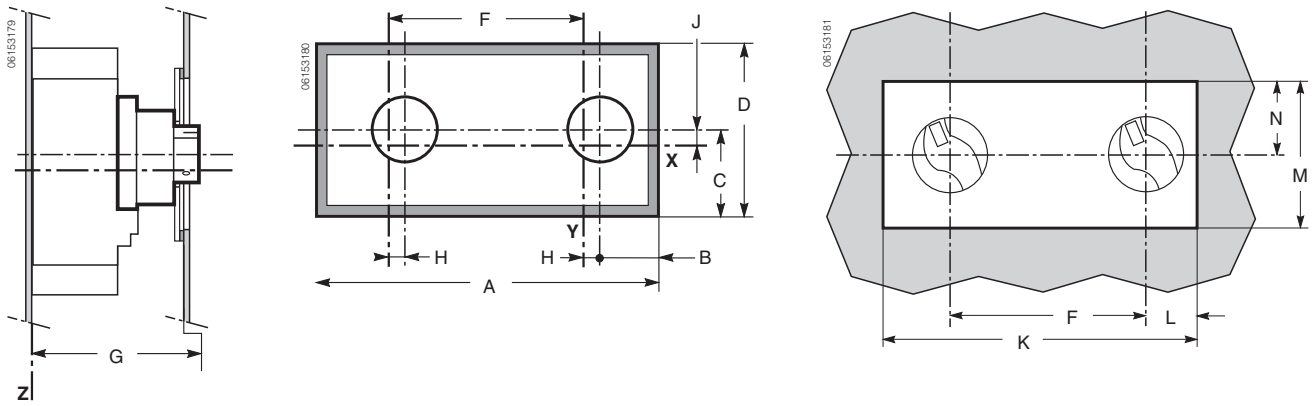

	A	B	C	D	F	G	H	J	K	L	M	N
inch	16.38	4.53	3.94	7.87	8.27	6.18	0.20	0.97	15.20	3.94	6.89	2.93
mm	416	115	100	200	210	157	5	24.6	386	100	175	74.5

Interlocking Systems with Toggle Handles

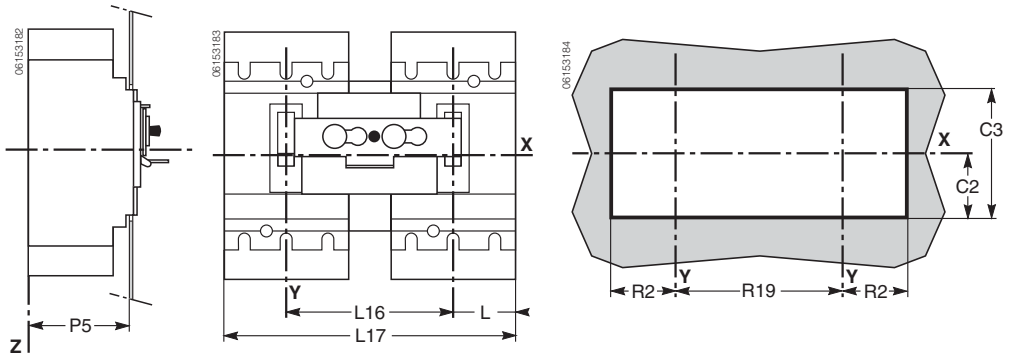

	C2	C3	L	L16	L17	R2	R19	P5
inch	3.64	7.24	2.75	7.28	12.79	2.81	7.28	4.21
mm	92.5	184	70	185	325	71.5	185	107

© 2007–2010 Schneider Electric
All Rights Reserved

Connector Dimensions

Fixed-Mounted Connections

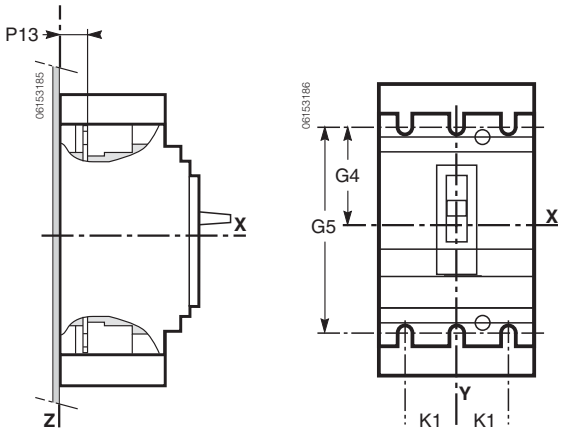

	G4	G5	K1	P13
inch	4.46	8.93	1.77	1.02
mm	113.5	227	45	526

Front Connections

Front Connections

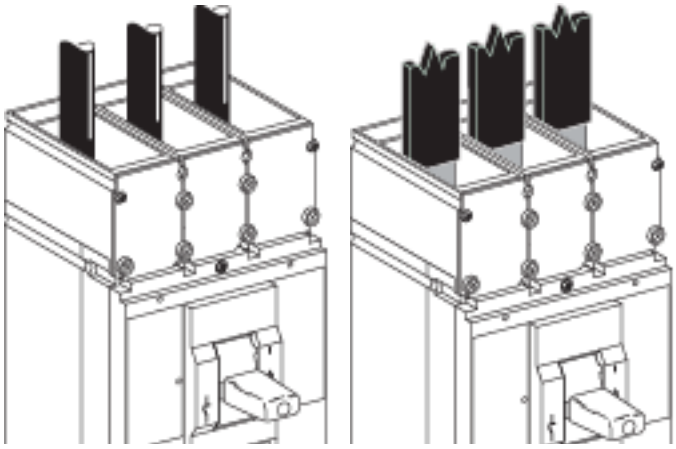

Bus Bar Connection

M10 Screws

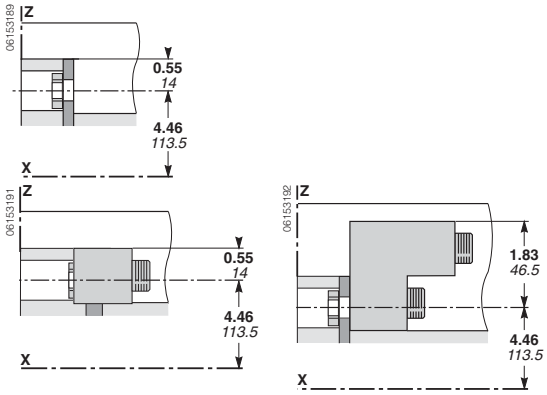

Dimensions: in. mm

Rear Connections

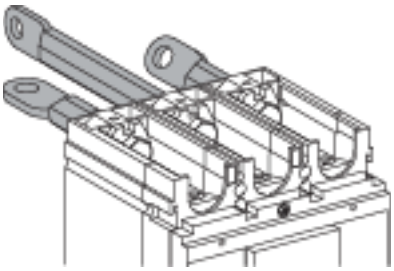

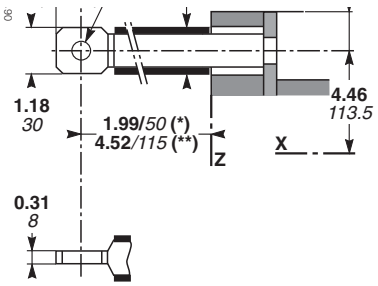

(*) Short RC : 1.96/*50*
(**) Long RC : 4.52/*115*

Dimensions: in. mm

© 2007–2010 Schneider Electric
All Rights Reserved

Plug-In or Drawout Mounting Connections

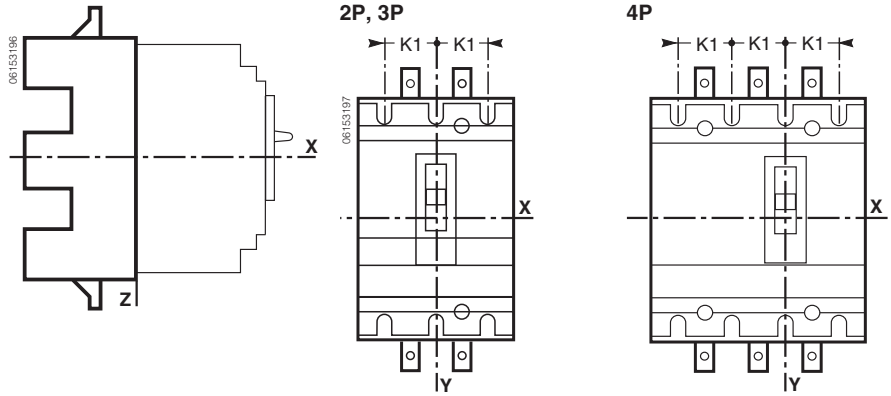

	K1
inch	1.77
mm	45

Rear Connections Fitted at Lower Limit

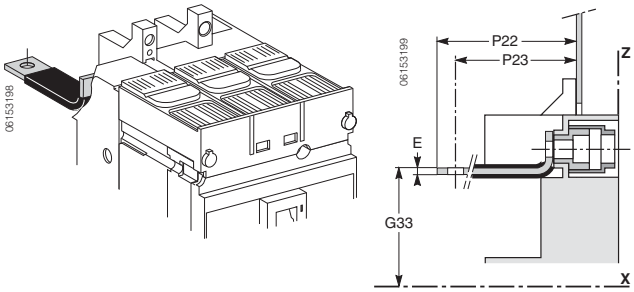

	E	G33	P22	P23
inch	0.23	4.09	4.50–7.14	3.93–6.57
mm	6	104	114.5–181.5	100–167

Rear Connections Fitted at Upper Limit

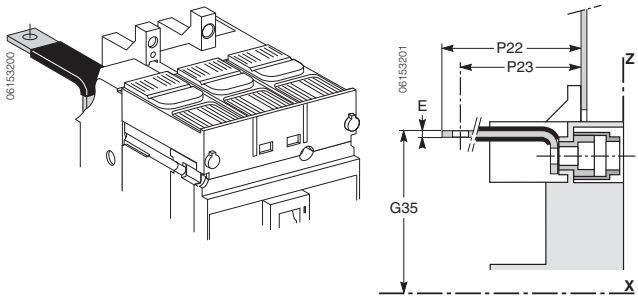

	E	G35	P22	P23
inch	0.23	5.07	4.50–7.14	3.93–6.57
mm	6	129	114.5–181.5	100–167

© 2007–2010 Schneider Electric
All Rights Reserved

Section 11—Trip Curves

Reflex Tripping

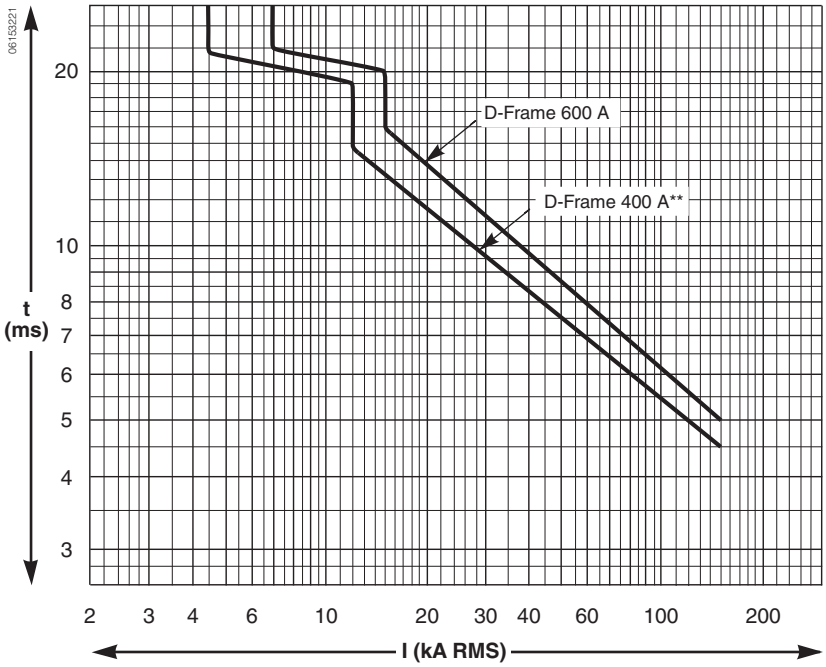

STR23SP Trip Curve

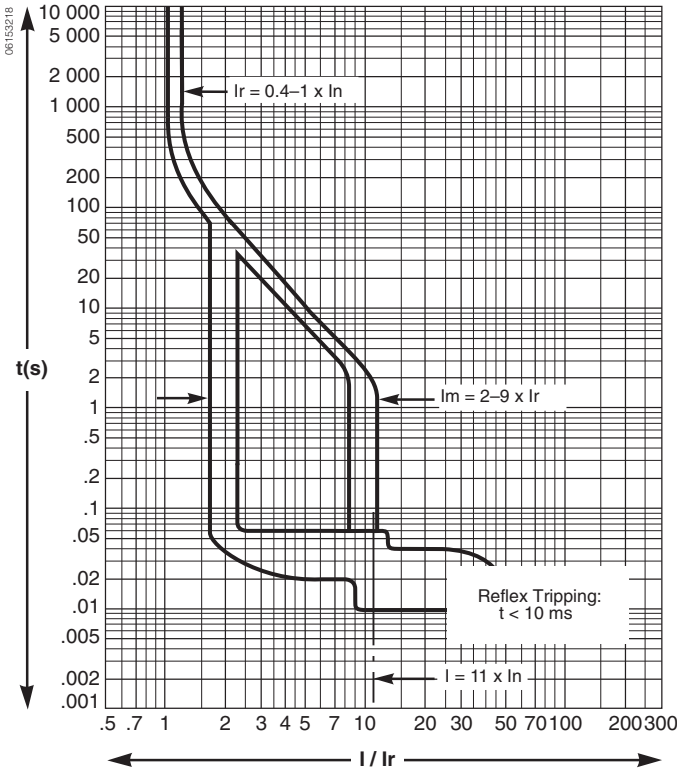

STR53UP Trip Curve

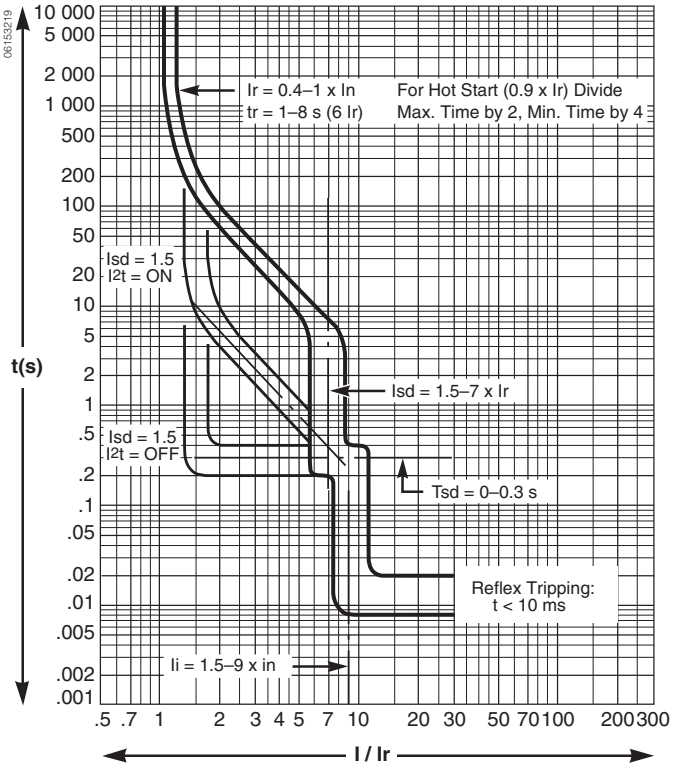

© 2007–2010 Schneider Electric
All Rights Reserved

D-Frame Mission Critical

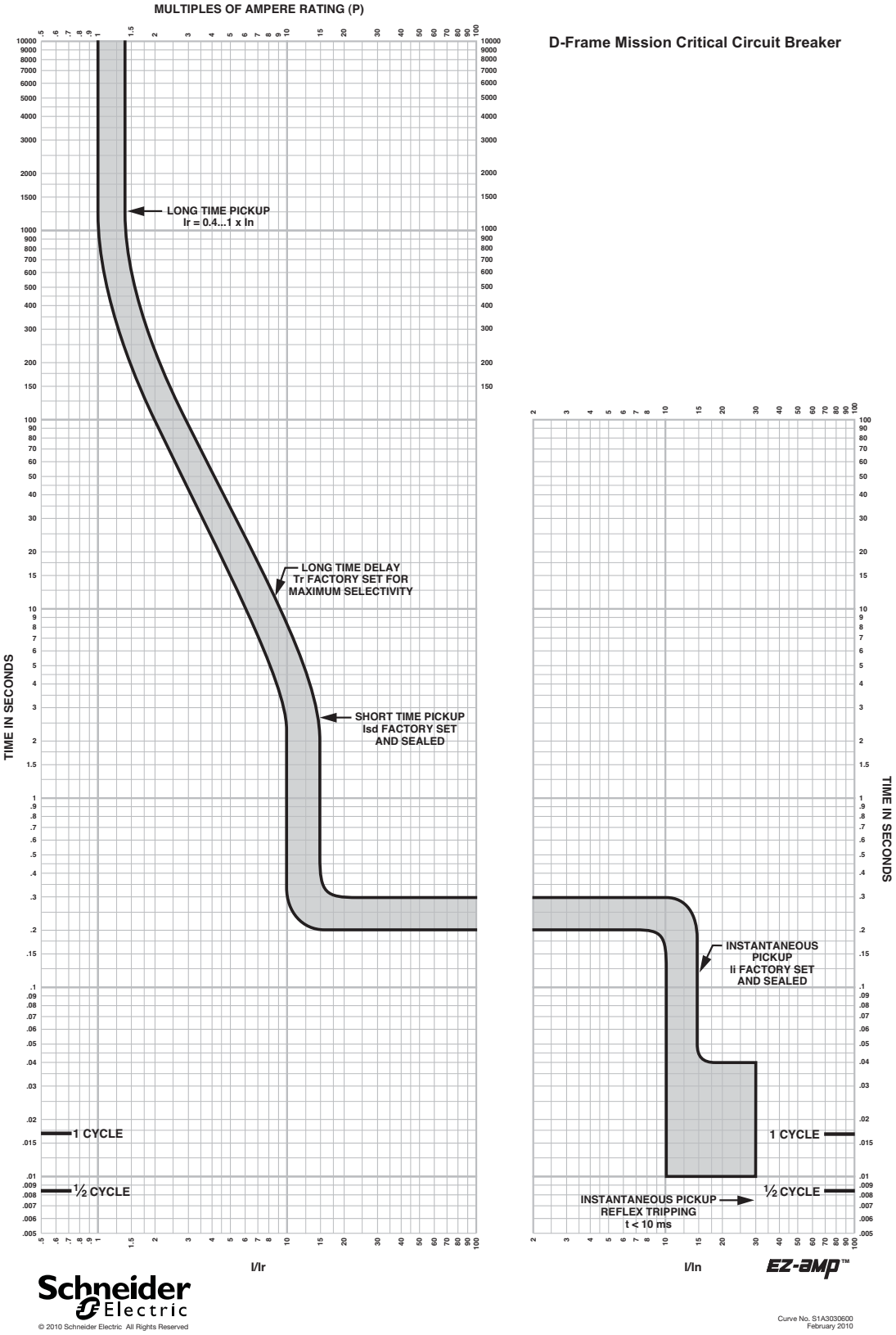

© 2007–2010 Schneider Electric
All Rights Reserved

Let-Through Curves at 480 V

Maximum Peak Let-Through Current (A)

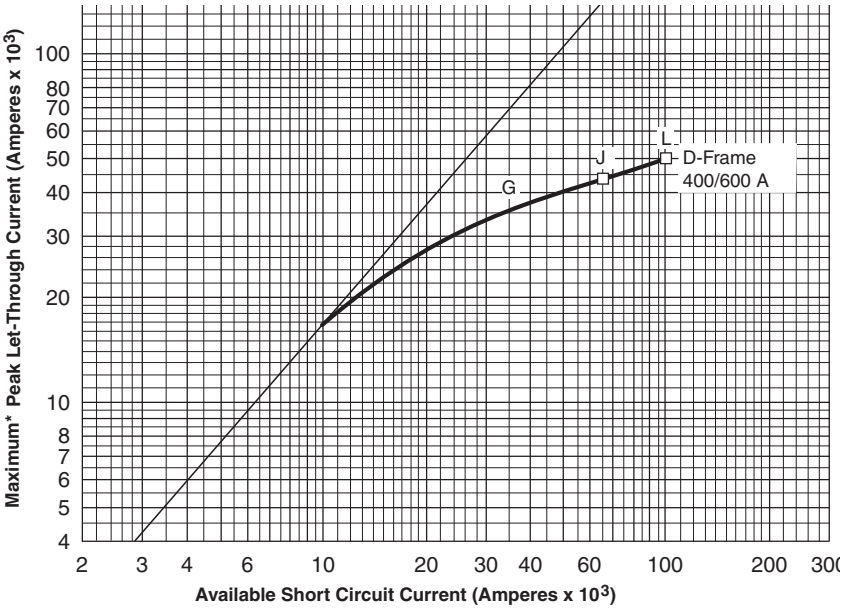

*Based on maximum values obtained throughout the circuit breaker development ant UL test programs
**4P OSN Compact® NSF 125/250N and NSF 150/250N ratings are same as NSF250

Maximum Let-Through I^2t (A^2s)

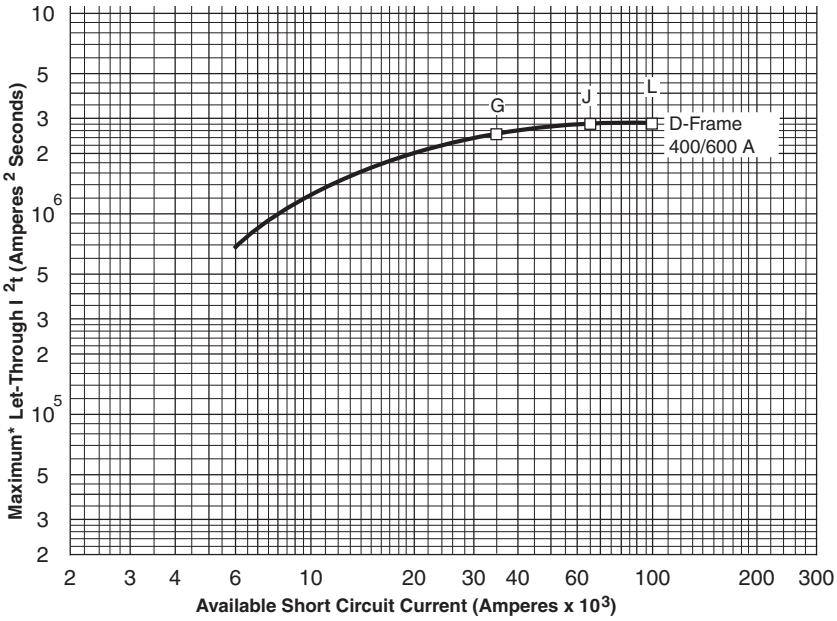

*Based on maximum values obtained throughout the circuit breaker development ant UL test programs
**4P OSN Compact® NSF 125/250N and NSF 150/250N ratings are same as NSF250

© 2007–2010 Schneider Electric
All Rights Reserved

Let-Through Curves at 600 V

Maximum Peak Let-Through Current (A)

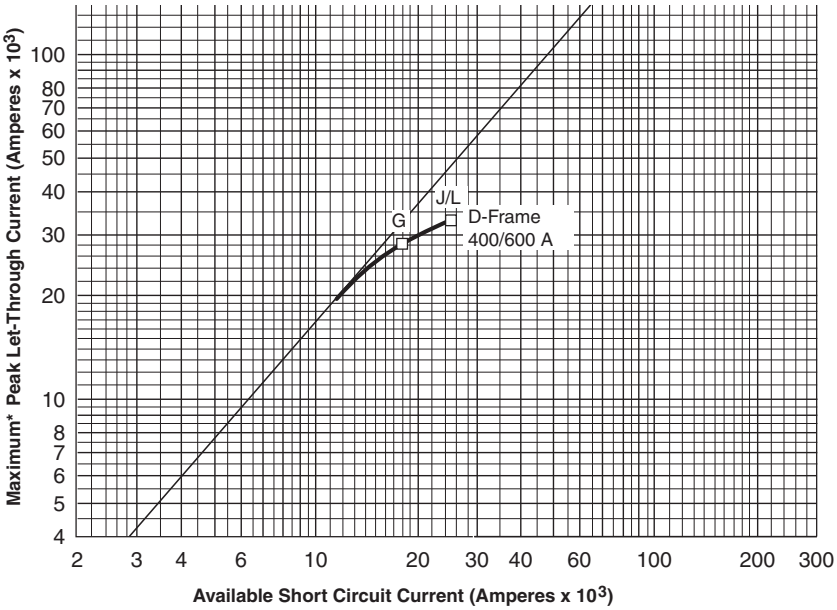

*Based on maximum values obtained throughout the circuit breaker development ant UL test programs
**4P OSN Compact® NSF 125/250N and NSF 150/250N ratings are same as NSF250

Maximum Let-Through I^2t (A^2s)

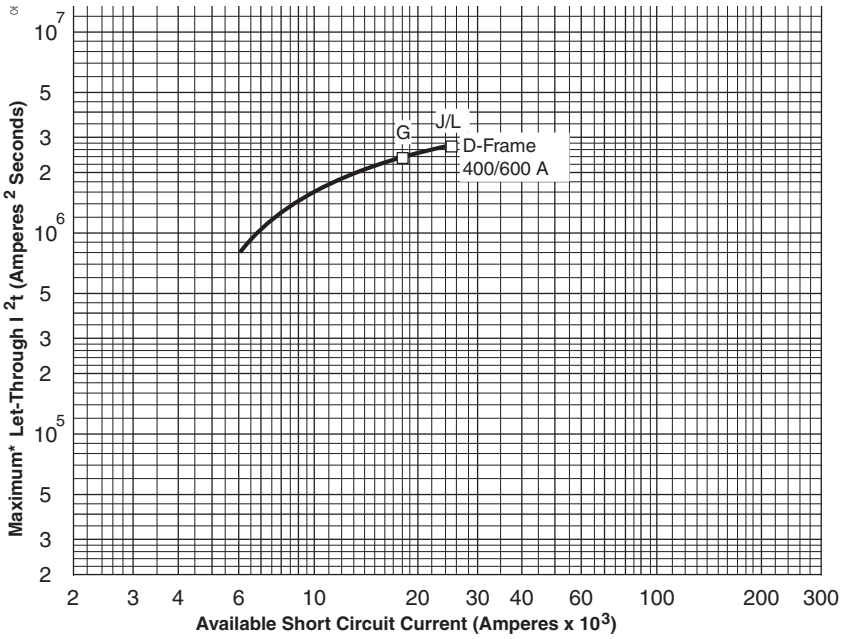

*Based on maximum values obtained throughout the circuit breaker development ant UL test programs
**4P OSN Compact® NSF 125/250N and NSF 150/250N ratings are same as NSF250

© 2007–2010 Schneider Electric
All Rights Reserved

Current-Limiting Curves at 380/415 V

Maximum Peak Let-Through Current (A)

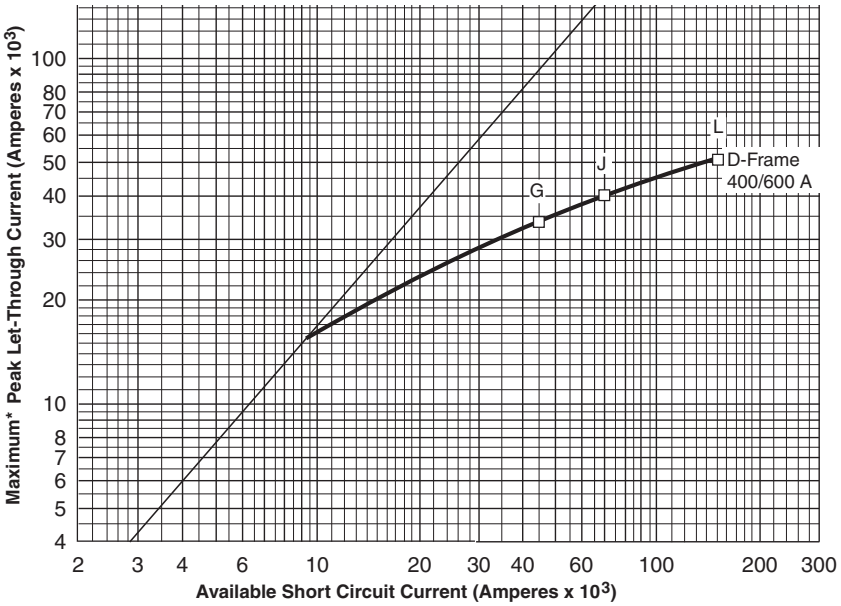

*Based on maximum values obtained throughout the circuit breaker development ant UL test programs
**4P OSN Compact® NSF 125/250N and NSF 150/250N ratings are same as NSF250

Maximum Let-Through I^2t (A^2s)

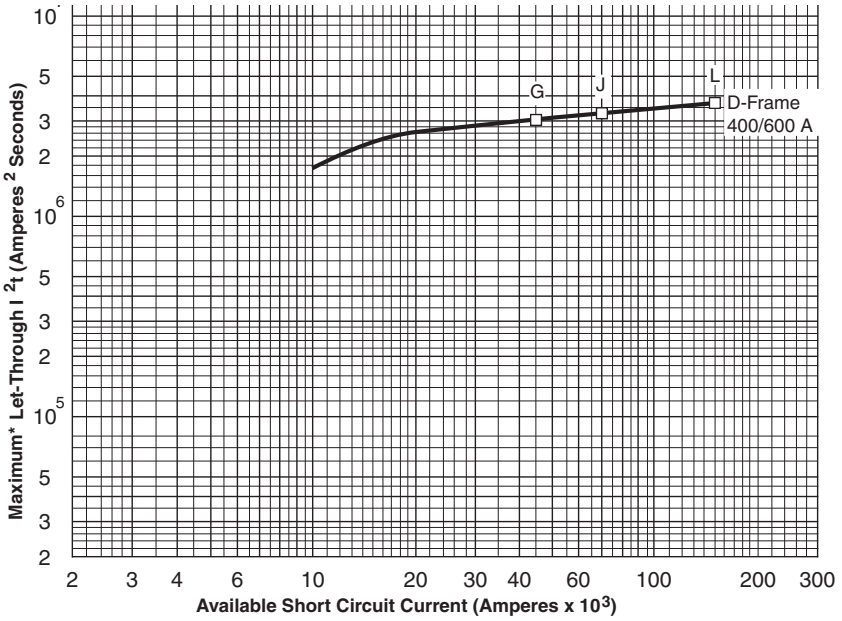

*Based on maximum values obtained throughout the circuit breaker development ant UL test programs
**4P OSN Compact® NSF 125/250N and NSF 150/250N ratings are same as NSF250

© 2007–2010 Schneider Electric
All Rights Reserved

Current-Limiting Curves at 690 V

Maximum Let-Through Current (A)

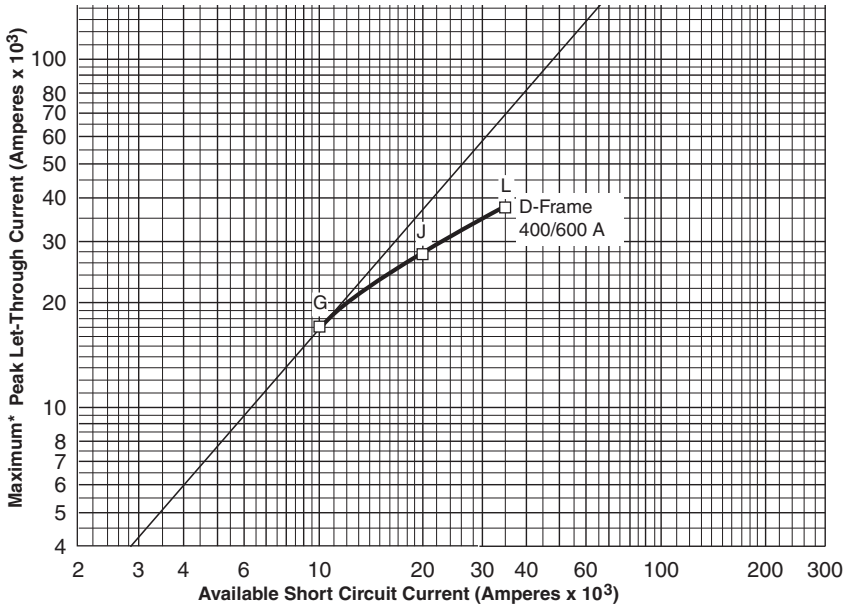

* Based on maximum values obtained throughout the circuit breaker development ant UL test programs
**4P OSN Compact® NSF 125/250N and NSF 150/250N ratings are same as NSF250

Maximum Let-Through I^2t (A^2s)

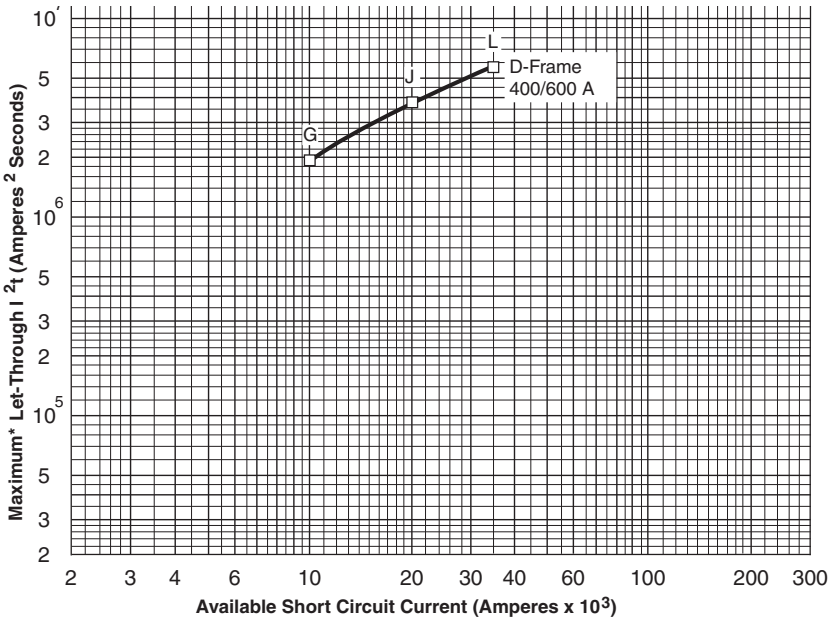

*Based on maximum values obtained throughout the circuit breaker development ant UL test programs
**4P OSN Compact® NSF 125/250N and NSF 150/250N ratings are same as NSF250

© 2007–2010 Schneider Electric
All Rights Reserved

Catalog Numbers

29272 33
29273 33
29286 33
29287 33
29346 41
29348 34
29348 34
32434 18
32441 18
32475 35
32475 35
32476 35
32476 35
32500 33
32508 34
32510 34
32514 33
32514 33
32518 33
32518 33
32518 33
32518 33
32520 33
32520 33
32520 33
32521 33
32523 33
32525 33
32532 33
32532 33
32533 33
32533 33
32534 33
32534 46
32546 33
32548 33
32553 42
32553 45
32556 45
32558 45
32560 45
32562 33
32562 33
32562 35
32563 33
32563 33
32563 35
32595 42
32595 45
32597 40
32597 8
32598 41
32598 8
32599 40
32599 8
32600 41
32600 8
32603 41
32603 8
32604 41
32604 44
32605 41
32606 40
32606 8
32614 43
32621 43
32639 40
32640 40
32641 40
32642 40
32643 40
32644 40
32645 40
32646 40
32647 40
32648 40
32648 40
32649 40
32649 40
32839 40
32840 40
32841 40
32842 40
32843 40
32844 40
32845 40
32846 40
32847 40
36940 18
36942 18
36943 18
36944 18
36945 18
36950 22
36951 22
36952 22
36953 22
36965 34
36966 35
36967 35
41940 40
41940 40
41940 41
41940 44
42878 44
42888 40
42888 40
42888 41
42888 44
9421LD1 42
9421LD4 42
9422A1 42
9422CSJ10 42
9422CSJ30 42
9422CSJ50 42
9422RSI 42
9422RSI 42
AB1 46
AL400L61K3 34
AL400L61K4 34
AL600LF52K3 34
AL600LF52K4 34
AL600LS52K3 34
AL600LS52K4 34
CU400L61K3 34
CU400L61K4 34
CU600LF52K3 34
CU600LF52K4 34
CU600LS32K3 34
CU600LS32K4 34
DGA34150 31
DGA34150E20 25
DGA34150E53 25
DGA34150E58 25
DGA34250E20 25
DGA34250E53 25
DGA34250E58 25
DGA34400E20 25
DGA34400E53 25
DGA34400E58 25
DGA34600E20 25
DGA34600E53 25
DGA34600E58 25
DGL36150E20 25
DGL36150E53 25
DGL36150E54 25
DGL36150E58 25
DGL36150E59 25
DGL36150F40 24
DGL36250E20 25
DGL36250E53 25
DGL36250E54 25
DGL36250E58 25
DGL36250E59 25
DGL36250F40 24
DGL36400E20 25
DGL36400E53 25
DGL36400E54 25
DGL36400E58 25
DGL36400E59 25
DGL36400F40 24
DGL36400M36 30
DGL36600E20 25
DGL36600E53 25
DGL36600E54 25
DGL36600E58 25
DGL36600E59 25
DGL36600F60 24
DGL36600M42 30
DJA34000S40 29
DJA34000S60 29
DJA34150E20 25
DJA34150E53 25
DJA34150E58 25
DJA34250E20 25
DJA34250E53 25
DJA34250E58 25
DJA34400E20 25
DJA34400E53 25
DJA34400E58 25
DJA34600E20 25
DJA34600E53 25
DJA34600E58 25
DJL36000S40 29
DJL36000S60 29
DJL36150E20 25
DJL36150E53 25
DJL36150E54 25
DJL36150E58 25
DJL36150E59 25
DJL36150F40 24
DJL36250E20 25
DJL36250E53 25
DJL36250E54 25
DJL36250E58 25
DJL36250E59 25
DJL36250F40 24
DJL36400E20 25
DJL36400E53 25
DJL36400E54 25
DJL36400E58 25
DJL36400E59 25
DJL36400F40 24
DJL36400M36 30
DJL36400M36 30
DJL36600E20 25
DJL36600E53 25
DJL36600E54 25
DJL36600E58 25
DJL36600E59 25
DJL36600F60 24
DJL36600M42 30
DJL36600M42 30
DJL46000S40 29
DJL46000S60 29
DJL56000S40 29
DJL56000S60 29
DLA34150E20 25
DLA34150E53 25
DLA34150E58 25
DLA34250E20 25
DLA34250E53 25
DLA34250E58 25
DLA34400E20 25
DLA34400E53 25
DLA34400E58 25
DLA34600E20 25
DLA34600E53 25
DLA34600E58 25
DLL36150E20 25
DLL36150E53 25
DLL36150E54 25
DLL36150E58 25
DLL36150E59 25
DLL36150F40 24
DLL36250E20 25
DLL36250E53 25
DLL36250E54 25
DLL36250E58 25
DLL36250E59 25
DLL36250F60 24
DLL36400E20 25
DLL36400E53 25
DLL36400E54 25
DLL36400E58 25
DLL36400E59 25
DLL36400F40 24
DLL36400M36 30
DLL36600E20 25
DLL36600E53 25
DLL36600E54 25
DLL36600E58 25
DLL36600E59 25
DLL36600F60 24
DLL36600M42 30
M32515 33
M32515 33
M32547 33
M32549 33
MICROTUSEAL 44
NJPAF 43
PDC12DG4 34
PDC5DG2 34
S29370 43
S29382 38
S29382 8
S29383 38
S29383 8
S29384 38
S29384 8
S29385 38
S29385 8
S29386 38
S29386 8
S29387 38
S29387 8
S29388 38
S29388 8
S29389 38
S29389 8
S29390 38
S29390 8
S29391 38
S29391 8
S29392 38
S29392 8
S29393 38
S29393 8
S29394 38
S29394 8
S29402 38
S29402 8
S29403 38
S29403 8
S29404 38
S29404 8
S29405 38
S29405 8
S29406 38
S29406 8
S29407 38
S29407 8
S29408 38
S29408 8
S29409 38
S29409 8
S29410 38
S29410 8
S29411 38
S29411 8
S29412 38
S29412 8
S29413 38
S29413 8
S29414 38
S29414 8
S29450 37
S29450 37
S29450 38
S29450 8
S29450 8
S29450 8
S29450 8
S29450 8
S29452 38
S29452 8
S29452 8
S29452 8
S29482 37
S29482 37
S29482 8
S29482 8
S32631 43
S32839 8
S32840 8
S32841 8
S32843 8
S32844 8
S32845 8
S32845 8
S32846 8
S32847 8
S33595 23
S33875 41
S48855 23
S48856 23
S48908 23

© 2007–2010 Schneider Electric
All Rights Reserved

Schneider Electric USA, Inc.
3700 Sixth St. SW
Cedar Rapids, IA 52404 USA
1-888-Square D
1-888-778-2733
www.us.SquareD.com

0616CT0801R06/10 © 2007–2010 Schneider Electric All Rights Reserved
Replaces 0616CT0801R0709

08/2010