Logic controller Modicon M238

Catalogue
January **2010**

Schneider Electric

Modicon M238 logic controller

Modicon M238 logic controller

Compact bases

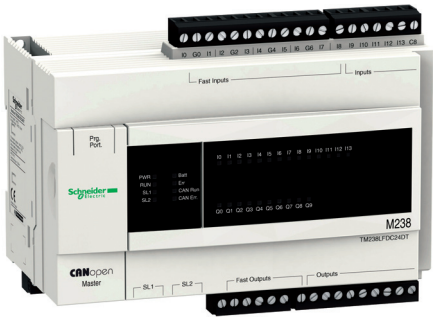

TM238 LFDC24DT

TM238 LFAC24DR

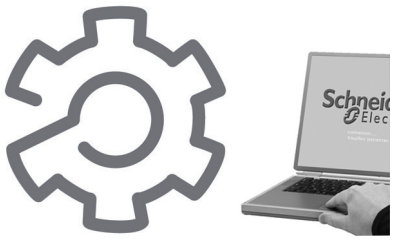

SoMachine software platform

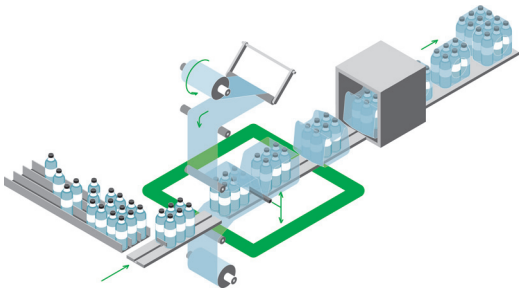

Presentation

Modicon M238 compact logic controllers offer an “all-in-one” solution in a compact unit (157 x 118 x 86 mm excluding extension modules). Four models are available, with different embedded communications and supply voltages.

Models TM238 LDD24DT and TM238 LFDC24DT, powered with 24 V ⎓ offer:
■ 14 x 24 V ⎓ inputs, including 8 fast inputs, dedicated to special functions such as high-speed counting (HSC)
■ 10 x 24 V ⎓ solid state outputs, including 4 fast outputs, dedicated to special functions such as PWM and PTO.
■ An RS 232/RS 485 serial link (SoMachine-Network, Modbus, ASCII protocols)
Model **TM238 LFDC24DT** also has:
■ A CANopen bus master link
■ A second RS 485 serial link (SoMachine-Network, Modbus, ASCII protocols)

Models **TM238 LDA24DR** and **TM238 LFAC24DR**, powered with 100-240 V ∿ offer:
■ 14 x 24 V ⎓ inputs, including 8 fast inputs, dedicated to special functions such as high-speed counting (HSC)
■ 4 x 24 V ⎓ solid state outputs, dedicated to HSC reflex functions, and 6 relay outputs
■ An RS 232/RS 485 serial link (SoMachine-Network, Modbus, ASCII protocols)
Model **TM238 LFAC24DR** also has:
■ A CANopen bus master link
■ A second RS 485 serial link (SoMachine-Network, Modbus, ASCII protocols).

■ The number of I/O can be expanded on all four models by adding up to 7 extension modules *(1)* of the following type on the right-hand side of the base unit:
□ Discrete **TM2 DDI/DDO/DMM/DRA**
□ Analog **TM2 AMI/ALM/ARI/AMO/AVO/AMM**
□ up to 3 High-speed counter **TM200 HSC206DT/DF**
□ up to 2 AS-Interface master module **TWD NOI 10M3**.

Modems or communication gateways can be connected to the serial links in order to expand the connectivity capability to include Ethernet Modbus/TCP, Profibus DP, DeviceNet, etc..

Note: *A serial link on each controller delivers a 5 V ⎓ voltage dedicated primarily to powering a Magelis display unit or Small panel terminal* **XBT N●00/R400/RT500** *or the Ethernet gateway* **499 TWD 01100**.

The compact controller solution also has great flexibility in terms of wiring. With discrete I/O extension modules, several connection options are available, including removable screw terminals, spring terminals and HE 10 connectors, providing simple, quick, safe wiring. The Advantys Telefast ABE 7 prewiring system can be used for easy connection of extension modules with HE 10 connectors.

(1) The addition of 7 extension modules allows a maximum number per configuration of 136/192/248 I/O (depending on whether extension modules with screw terminals, spring terminals or HE 10 connectors are being used).

Design and installation of Modicon M238 applications

Schneider Electric's **SoMachine** software platform can be used to program Modicon M238 controllers using:
■ IEC 61131-3 programming languages: Instruction List (IL), Ladder Diagram (LD), Function Block Diagram (FBD), Sequential Function Chart/Grafcet (SFC) and Structured Text (ST)
■ CFC (Continuous Function Chart) language.

Modicon M238, the solution for packaging and conveying machines

The Modicon M238 controller's languages, dedicated function blocks and integrated functions (HSC (high-speed counting), PTO (Pulse Train Outputs)and PWM (Pulse Width Modulation) mean that Modicon M238 controllers are ideal for use with Altivar variable speed drives, Lexium servo drives and Magelis HMI terminals in packaging machine applications:
□ Vertical bagging machines
□ Vertical packaging machines
□ Rotary or linear labelling machines
□ Conveyors
□ Etc.

Characteristics: page 5...
References: page 10...
Dimensions, mounting: page 11...
Connections: page 12...

Modicon M238 logic controller
Compact bases

Compact base configuration

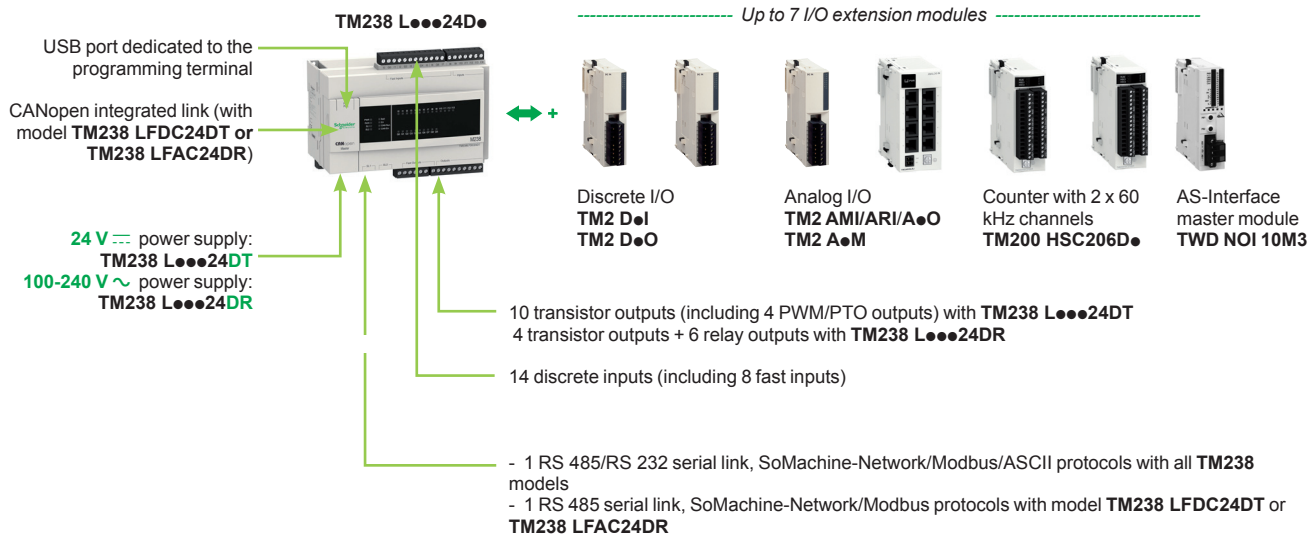

Description

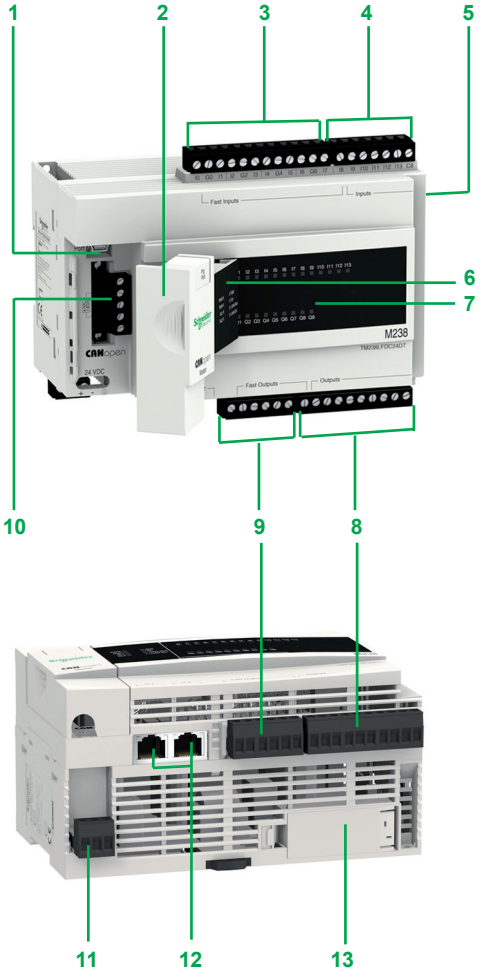

The Modicon M238 logic controller bases **TM238 LDD24DT/LFDC24DT** and **TM238 LDA24DR/LFAC24DR** comprise:

1 A mini B USB connector, marked Prg. Port, for connecting a programming terminal

2 A hinged access cover with 2 cable glands (1 removable for the terminal cordset and 1 for the CANopen cable)

3 A removable screw terminal block (12 terminals) for connecting the sensors (24 V ⎓ fast inputs)

4 A removable screw terminal block (7 terminals) for connecting the sensors (24 V ⎓ inputs)

5 A connector for up to 7 discrete **TM2 D●●**, analog **TM2 A●●**, counter **TM200 HSC206D●**, and up to 2 AS-Interface master module **TWD NOI10M3** I/O extension modules

6 A display unit showing:
- The controller status by means of 4 LEDs (PWR, RUN, Batt and Err)
- The integrated communication port status by means of 4 LEDs (SL1, SL2, CAN Run and CAN Err)

7 A display unit showing the I/O states (I0…I13 and Q0…Q9)

8 A removable screw terminal block (10 terminals) for connecting 6 preactuators

9 A removable screw terminal block (6 terminals) for connecting 4 preactuators

10 A removable screw terminal block (5 terminals marked CANopen) for connection to the CANopen bus, with model **TM238 LFDC24DT** or **TM238 LFAC24DR**

Accessible from the underside of the controller:

11 A removable screw terminal block (3 terminals):
□ +, -, ⏚ marked 24 VDC for connecting the 24 V ⎓ power supply
□ L, N, ⏚ marked 100-240 VAC for connecting the 100-240 V ∼ power supply

12 One RJ45 connector marked SL1 (with model **TM238 LDD24DT** or **TM238 LDA24DR**) or 2 RJ45 connectors marked SL1 and SL2 (with model **TM238 LFDC24DT** or **TM238 LFAC24DR**) for connecting the serial links

13 A hinged cover for accessing the RAM backup battery (optional) and the internal real-time clock

The compact bases are mounted as standard on a symmetrical ⊥ rail or on a metal plate (two Ø 4.3 holes).

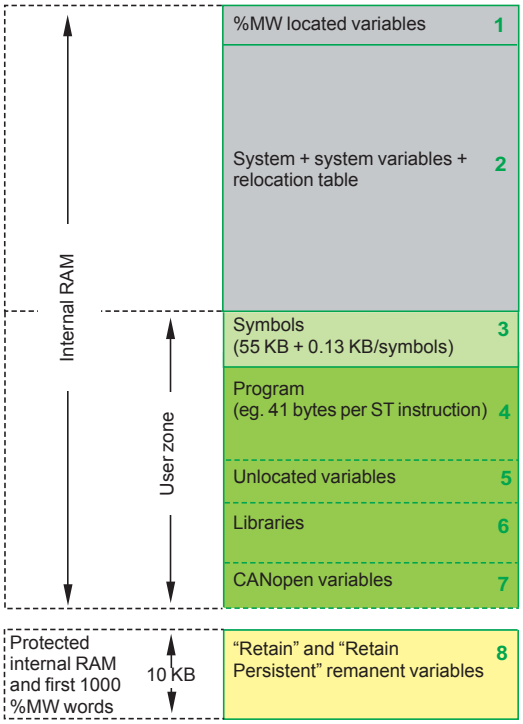

Memory structure

Modicon M238 controllers offer great flexibility in memory management. Depending on the model used, they have a user memory zone of:
- 500 KB with **TM238 LDD24DT** or **TM238 LDA24DR** base
- 1024 KB with **TM238 LFDC24DT** or **TM238 LFAC24DR** base.

This user memory zone is divided according to the application program requirements and the volume needed by the symbols, unlocated variables and libraries required by the application.

The memory structure of Modicon M238 controllers is shown opposite.

The table below lists the maximum memory capacities depending on the model *(1)*.

		TM238 LDD24DT, TM238 LDA24DR	TM238 LFDC24DT, TM238 LFAC24DR
Internal RAM	**KB**	1024	2048
1 Located variables	**KB**	120 (60,000 %MW)	120 (60,000 %MW)
2 System + system variables + relocation table	**KB**	400	900
User zone	**KB**	500	1000
3 Symbols	**KB**	100 (max. 400 symbols)	200 (max. 1000 symbols)
4 Program (including online program modification)		As required by the application, within the limits of the size of the user zone	
5 Unlocated variables			
6 Libraries			
7 CANopen variables	**KB**	–	115 + 10 per slave
Protected internal RAM	**KB**	10	10
8 "*Retain*" variables	**Bytes**	8168	8168
8 "*Retain Persistent*" variables	**Bytes**	400	400
8 First 1000 %MW words	**Bytes**	2000	2000

(1) Values given for information only.

Storing variables

Remanent variables can be one of two types depending on their declaration in the application:
- "*Retain*" variables, 8168 bytes maximum
- "*Retain Persistent*" variables, 400 bytes maximum.

The first 1000 located variables **1** (first 1000 %MW words) and all the unlocated variables **5** configured as "*Retain*" and *"Retain Persistent*" type are backed up by the internal battery or by the optional external battery. They are maintained when the power returns if the startup context allows this (see "Restart context" below).
In addition, *"Retain Persistent*" type variables are maintained on a change of application if the startup context allows this (see "Restart context" below).

Restart context

The state of the remanent memory before disconnection is restored on the next power-up when the internal battery and/or the optional external battery is/are capable of protecting the internal RAM (no memory checksum error).
If the internal battery or optional external battery does not have enough charge to back up the internal RAM, the values of the "*Retain"* and *"Retain Persistent*" remanent variables are reset to 0.

The external battery can be monitored by the *GetBatteryLevel* software function, and its charging status is visible from the status of the Batt LED on the front of the controller.

Storing the program

Regardless of the context and status of the internal battery and/or optional external battery, the program is backed up in the Flash EEPROM during the "*boot application*" creation procedure (SoMachine software procedure).

Environment

Type of base			TM238 LDD24DT, TM238 LDA24DR, TM238 LFDC24DT, TM238 LFAC24DR
Certifications			■ For all bases: CE, UL, CSA, ACA (C-Tick), GOST (pending) ■ For TM238 LDA24DR and TM238 LFAC24DR bases: CSA (Class 1, Division 2, Groups A, B, C, D)
Temperature	Operation	°C	- 10…+ 55
	Storage	°C	- 40…+ 70
Relative humidity			95% max. without condensation
Degree of	Protection		IP 20
	Pollution		⩽ 2
Altitude	Operation	m	0…2000
	Storage	m	0…3000
Immunity to mechanical stress	Sinusoidal vibration		5…150 Hz with 3.5 mm amplitude at 1 g Endurance: 10 cycles of 1 octave/min per axis
	Shock		15 g/11 ms; 3 shocks/direction/axis

Characteristics of the compact bases

Type of base				TM238 LDD24DT	TM238 LDA24DR	TM238 LFDC24DT	TM238 LFAC24DR
Backup components	Protected internal RAM			"*Retain*" and "*Retain Persistent*" type variables (types declared at the time of configuration)			
	Type of component	Internal battery		Type VL1220, 7mAh non-replaceable			
		Optional battery		Lithium thionyl chloride TSX PLP 01			
	Backup autonomy	Internal battery		3 days			
		Optional battery		1 year			
	Charging time	Internal battery	hrs	22 for a full charge			
	Service life	Internal battery		10 years max. (derating depending on the operating temperature)			
Discrete I/O	No. of 24 V ⎓ inputs			14, 8 of which can be configured as fast inputs			
	No. of outputs			10 transistor, 4 of which can be configured as fast outputs	4 transistor + 6 relay	10 transistor, 4 of which can be configured as fast outputs	4 transistor + 6 relay
	Connection via			4 removable screw terminal blocks (supplied as standard) 4 removable spring terminal blocks with optional unit TM238 RSSPT (to be ordered separately)			
I/O extension	Max. number of modules			7: discrete, analog, high-speed counter, AS-Interface master (3 high-speed counter TM200HSC060●●, 2 TWDNOI10M3 AS-Interface master)			
	Max. number of discrete I/O			136/192/248 *(1)*			
Embedded communication	Serial link			1 RS 232/RS 485 channel (SL1) delivering a 5 V ⎓ voltage		1 RS 232/RS 485 channel (SL1) 1 RS 485 channel (SL2) delivering a 5 V ⎓ voltage	
	CANopen			–		1 master for 16 slaves max.	
Real-time clock				Integrated. Drift: 10 s a month at 25°C			
User zone in internal RAM (see page 4)	Capacity		KB	500		1000	
	No. of instructions			10 Kinstructions depending on the language and type of instruction used		25 Kinstructions depending on the language and type of instruction used	
Application structure	Master task			1 task configurable as "*Freewheeling*" or "*Cyclic*" 1 "*Freewheeling*" task max. among different choices			
	Auxiliary tasks			2 tasks configurable as "*Freewheeling*", "*Cyclic*", or "*Event*", tripped on the rising and/or falling edge of a Boolean variable			
	Interrupt tasks			4 "*External*" tasks tripped by the fast inputs or by the integrated counter channels			
	Priority between tasks			32 levels of priority of execution can be assigned to each of the 7 tasks			
I/O assignment	I/O on base			Read/write by the task which uses the I/O integrated in the base			
	I/O on extension modules			Read/write by the master task regardless of which task is using the extension module I/O			
	I/O on CANopen bus			–		Read/write by the master task regardless of which task is using the I/O on the CANopen bus	

(1) The 1st value corresponds to the maximum number of I/O (base and extensions) with extension modules with screw terminals, the 2nd to extension modules with spring terminals and the 3rd to extension modules with HE 10 connectors.

Characteristics of the compact bases

Type of base			TM238 LDD24DT, TM238 LDA24DR, TM238 LFDC24DT, TM238 LFAC24DR		
Typical no. of Kinstructions executed per ms	70% Boolean + 30% fixed arithmetic	**Kinst/ms**	3		
Execution time for one instruction	Boolean	**µs**	0.971		
	Arithmetic		INT word	DINT double word	REAL floating point
	+, -, x operations	**µs**	0.439	0.506	5.111
	/ operation	**µs**	–	–	7.25
	LD and ST	**µs**	0.42	0.459	0.648
Event task execution time *(1)*		**ms**	0.75 min	0.95 typical	1.75 max.
Master task system overhead	I/O and system	**ms**	0.9		
	Counting	**ms**	0.15 (simple counting), 0.35 (advanced counting)		
	Motion	**ms**	0.15 (PWM, frequency meter), 0.20 (PTO) *(2)*		

Power supply

Type of compact base			TM238 LDD24DT	TM238 LFDC24DT	TM238 LDA24DR	TM238 LFAC24DR
Voltage	Nominal	**V**	24 ⎓ (- 15% / + 20 %)		100-240 V ∿ (+ 10% / - 15 %)	
	Limit (including ripple)	**V**	19.2...28.8 ⎓		85…264 V ∿ (Frequency 47…63 Hz)	
Sensor power supply			Use an external 24 V ⎓ Phaseo power supply from the Optimum range			
Max. inrush current (Un)		**A**	35			
Immunity to micro-cuts (class PS-2)		**ms**	10			
Max. consumption		**W**	17.2		25 at 100 V ∿, 42 at 264 V ∿	
Dielectric strength	Between power supply terminals and earth terminals	**V rms**	500 ⎓ for 1 min		1500 ⎓ for 1 min	
	Between I/O terminals and earth terminals	**V rms**	500 ⎓ for 1 min		1500 ⎓ for 1 min	
Isolation resistance	Between power supply terminals and earth terminals	**MΩ**	> 10 (500 V ⎓)		> 10 (500 V ⎓)	
	Between I/O terminals and earth terminals	**MΩ**	> 10 (500 V ⎓)		> 10 (500 V ⎓)	

(1) Time including acquisition of the event, processing of 100 IL instructions and activation of an output.
*(2) Only with **TM238 LDD24DT** and **TM238 LFDC24DT**.*

Communication

Type of compact base				TM238 LDD24DT, TM238 LDA24DR	TM238 LFDC24DT, TM238 LFAC24DR
Terminal port "Prg. Port"	Type			1 USB 2.0	
	Connection			Mini B USB connector	
RS 485/ RS 232 serial port	Marking on front panel			**SL1**	**SL1** *(1)*
	Type			Master/slave type isolated serial link	
	Physical interface			RS 485/RS 232	
	Data rate		**Kbps**	1.2…115.2 (115.2 by default)	1.2…38.4 (19.2 by default)
	Protocol	Default		SoMachine-Network (programming/ debugging)	Modbus slave
				Modbus master/slave RTU/ASCII, ASCII, SoMachine-Network	
	Peripheral			Delivers a 5 V ⎓/200 mA power supply *(2)*	–
	Connection			RJ45 female connector	
RS 485 serial port	Marking on front panel			**–**	**SL2** *(1)*
	Type			–	Master/slave type isolated serial link
	Physical interface			–	RS 485
	Data rate		**Kbps**	–	1.2…115.2 (115.2 by default)
	Protocol	Default		–	SoMachine-Network (programming/ debugging)
				–	Modbus master/slave RTU/ASCII, ASCII, SoMachine-Network
	Peripheral			–	Delivers a 5 V ⎓/200 mA power supply *(2)*
	Connection			–	RJ45 female connector
CANopen port	Standards			–	DS 301 V4.02, DR 303-1
	Class			–	Conformity class M20, limited to 16 slaves
	Data rate	Max. length	**m**	–	**20** / **50** / **100** / **125** / **250** / **500** / **1000**
		Data rate	**Kbps**	–	1000 / 800 / 500 / 425 / 250 / 125 / 50
	No. of slaves			–	16 max. with max. limit of: 64 TPDOs and 64 RPDOs *(3)*
	Line matching			–	Line termination resistor supplied with the screw terminal block, to be mounted when necessary
	Connection			–	Removable screw terminal block supplied with the base

Integrated functions

Type of compact base			TM238 LDD24DT, TM238 LFDC24DT	TM238 LDA24DR, TM238 LFAC24DR
HSC	No. of channels		8 x 100 kHz simple channels, 4 x 100 kHz simple channels and 1 x 100 kHz advanced channel *(4)* or 2 x 100 kHz advanced channels *(4)*	
	Capacity		32 bits	
Motion or Reflex functions	No. of channels		2 advanced channels	4
	Frequency		PMW: 20 kHz PTO: 100 kHz	100 Hz
	Functions		PWM (Pulse Width Modulation) output PTO (Pulse Train Output)	HSC reflex
PID regulation			Yes	
Event processing			Yes, up to 4 event tasks that can be activated by the base's fast inputs or by the integrated counter channels (threshold attained)	

(1) Serial link "SL1" and serial link "SL2" are not isolated from one another.
*(2) 5 V ⎓/200 mA power supply for self-powering of a Magelis XBT N/R HMI terminal or the Ethernet gateway **499 TWD 01100**.*
(3) TPDOs: transmitted process data objects (PDOs). RPDOs: received process data objects (PDOs).
(4) Advanced channel with two-phase signal inputs for encoder, threshold detection function and reflex function.

⎓ input characteristics

Type of compact base				TM238 LDD24DT, TM238 LFDC24DT, TM238 LDA24DR, TM238 LFAC24DR		
Type of input				**Physical inputs I8 to I13**	**Physical inputs I0 to I7**	
Number of input channels				6	8, 100 kHz max.	
Nominal input values	Voltage		**V**	24 ⎓		
	Current		**mA**	10.4	8	
Input logic				Sink/source (positive/negative)	Sink (positive)	
Commons				1	4	
Sensor power supply (including ripple)			**V**	19.2...30 ⎓		
Input limit values	At state 1	Voltage	**V**	⩾ 15		
		Current	**mA**	⩾ 2		
	At state 0	Voltage	**V**	⩽ 5		
		Current	**mA**	⩽ 1.5		
Input impedance			**kΩ**	2.3	3	
Response time				3 ms	300 ns	
Digital filtering (configurable)			**ms**	–	0.004 - 0.4 - 1 - 2 or 4	
Anti-bounce filtering (configurable)			**ms**	0 - 1.5 - 4 or 12		
IEC/EN 61131-2 conformity				Type 1		
Max. input frequency					Counter mode	Normal mode
				100 Hz	100 kHz	100 Hz
Length of sensor connection cables			**m**	30 max.	10 max. with shielded cable	30 max.
Isolation	Between channels		**V**	None	500 ⎓ between groups of 2 channels	
	Between channels and internal logic		**V**	500 ⎓		

Output characteristics

Type of compact base ⎓				TM238 LDD24DT, TM238 LFDC24DT			
Type of output				**Fast solid state outputs (Q0 to Q3)**			**Solid state outputs (Q4 to Q9)**
Number of output channels				4			6
Output power supply	Nominal value		**V**	24 ⎓			
	Limit values		**V**	19.2...30 ⎓ (including ripple)			
				PWM mode	PTO mode	Normal mode	
Output current	Minimum		**mA**	–	–	–	20
	Maximum		**mA**	100	100	500	500
Max. frequency				20 kHz	100 kHz	–	100 Hz
Accuracy	Cyclic ratio 20…80%		**%FS**	1	–	–	–
	Accuracy			–	1%	–	–
Output logic				Source (positive)/Sink (negative)			Source (positive)
Commons				1			2
Response time			**ms**	–		0.25	< 1
Leakage current			**mA**	< 2			0.05
Voltage drop			**V**	< 2			
Tungsten filament lamp max. power			**W**	< 3			
Protection	Against short-circuits			Yes, against short-circuits at the 0 V ⚠			Yes
	Against overloads			Yes			
	Against overvoltages			Yes			
Length of connection cables			**m**	10 max. with shielded cable		30 max.	30 max.
Isolation	Between channels		**V**	500 ⎓			
	Between channels and internal logic		**V**	500 ⎓			

⚠ Never connect a positive polarity to fast outputs (see page 15).

Output characteristics *(continued)*

Type of compact base ∿			TM238 LDA24DR, TM238 LFAC24DR	
Type of output			**Solid state outputs (Q0 to Q3)**	**Relay outputs (Q4 to Q9)**
Number of output channels			4	6
Output power supply	Nominal value	**V**	24 ⎓	24 ⎓/240 ∿
	Limit values	**V**	19.2…30 ⎓ (including ripple)	30 ⎓/250 ∿
Output current	Nominal	**A**	0.5	2: Q4 to Q8 (resistive load) 5: Q9 (resistive load)
	Minimum	**mA**	20	10 (⎓ 5V)
	Maximum	**mA**	500	–
Commons	Common 4 (C4)		–	2 "N/O" contacts (2 A per channel and 4 A per common)
	Common 6 (C6)		–	2 "N/O" contacts (2 A per channel and 4 A per common)
	Common 8 (C8)		–	1 "N/O" contact (2 A)
	Common 9 (C9)		–	1 "N/O" contact (5 A)
Min. switchable load		**mA**	–	10 for 5 V ⎓ (reference data)
Switch resistance	When new	**mΩ**	–	50 max.
Load on relay outputs Q4 to Q8	Resistive	**A**	–	2 at 240 V ∿ or 2 at 30 V ⎓ (with 600 operations per hour max.)
	Min. electrical service life		–	1 x 10^5 operations
	Minimum mechanical service life		–	20 x 10^6 operations
	Inductive without protection device *(1)*/capacitive		–	Use of relays not guaranteed (significant reduction in their service life). For this type of application, it is advisable to use the transistor outputs of extension modules TM2 DDO●●●
Load on output Q9	Resistive	**A**	–	5 at 240 V ∿ or 5 at 30 V ⎓ (with 1800 operations per hour max.)
	Min. electrical service life		–	5 x 10^4 operations
	Minimum mechanical service life		–	20 x 10^6 operations
	Inductive without protection device *(1)* /c apacitive		–	Use of relays not guaranteed (significant reduction in their service life). For this type of application, it is advisable to use the transistor outputs of extension modules TM2 DDO●●●
Max. frequency			100 Hz	–
Output logic			Source (positive)	–
Commons			1	–
Response time		**ms**	0.25	–
Leakage current		**mA**	< 2	–
Voltage drop		**V**	< 2	–
Tungsten filament lamp max. power		**W**	< 3	–
Protection	Against short-circuits		Yes, against short-circuits at the 0 V ⚠	–
	Against overloads		Yes	–
	Against overvoltages		Yes	–
Length of connection cables		**m**	30 max.	30 max.
Insulation voltage	Between channels and internal logic	**V rms**	500 ⎓	500 ∿ for 1 min

⚠ Never connect a positive polarity to fast outputs (see page 15).
(1) Each inductive load must be equipped with a protection device such as a peak limiter, RC circuit or freewheel diode.

Modicon M238 logic controller

Compact bases

TM238 LFDC24DT

TM238 LFAC24DR

TSX PLP 101

TCS XCN AMUM3P

TM200 RSRCEMC

499 TWD 01100 LUF P●

SR2 MOD03

HMI ZSUSBB

References

Number of I/O	Inputs	Outputs	No. of I/O extension modules	Integrated serial port	Integrated master CANopen port	Reference	Weight kg
Compact bases, 24 V ⎓ power supply							
24 I/O (removable battery to be ordered separately)	6 x 24 V ⎓ inputs (sink/source) 8 x 24 V ⎓ fast inputs (sink)	10 transistor outputs (source) including 4 fast	7 modules max.	1 RS 232/485 *(1)* (marked SL1)	–	**TM238 LDD24DT**	0.560
				1 RS 232/485 (marked SL1) 1 RS 485 *(1)* (marked SL2)	1	**TM238 LFDC24DT**	0.595
Compact bases, 100-240 V ∼ power supply							
24 I/O (removable battery to be ordered separately)	6 x 24 V ⎓ inputs (sink/source) 8 x 24 V ⎓ fast inputs (sink)	4 transistor outputs (source) and 6 relay outputs	7 modules max.	1 RS 232/485 *(1)* (marked SL1)	–	**TM238 LDA24DR**	0.560
				1 RS 232/485 (marked SL1) 1 RS 485 *(1)* (marked SL2)	1	**TM238 LFAC24DR**	0.595

Separate parts

Designation	Use		Length Sold	Reference	Weight kg
Removable backup batteries	Lithium thionyl chloride type for Modicon M238 compact bases TM238 L●●●●●		Individual	**TSX PLP 01**	0.012
			Pack of 10	**TSX PLP 101**	0.189
Terminal port/USB port cordset	From the mini B USB port on the Modicon M238 base to the type A USB port on the PC terminal for programming and updating firmware		3 m	**TCS XCN AMUM3P**	0.065
RS 232 serial link cordsets for DTE/DCE terminal device	1 RJ45 connector and one 9-way SUB-D connector	For DTE terminal (printer)	3 m	**TCS MCN 3M4F3C2**	0.150
		For DCE terminal (modem, converter)	3 m	**TCS MCN 3M4M3S2**	0.150
Removable spring connectors for discrete I/O	Set of 5 removable spring connectors. Replaces the 5 screw connectors supplied with Modicon M238 compact bases		–	**TM238 RSSPT**	0.048
Shielding connection clamps	Attachment and earthing of the cable shielding Pack of 25 clamps including 20 clamps for Ø 4.8 mm cable and 5 for Ø 7.9 mm cable		Pack of 25	**TM200 RSRCEMC**	–
Modbus communication gateways	Connection of Modicon M238 base to network/bus	Ethernet Modbus/TCP	*(2)*	**499 TWD 01100**	0.200
		Profibus DP	*(3)*	**LUF P7**	0.245
		DeviceNet	*(3)*	**LUF P9**	0.245
GSM/GPRS modem (DCE terminal)	4-band 900/1800 MHz (Europe) and 850/1900 MHz (United States) IP 31 casing supplied with: - 1.5 m power cable - SMA-M magnetic GSM 4-band aerial with 2.5 m cable - Fixed on panel or ⊔ 5.5…24 V ⎓ supply voltage		–	**SR2 MOD03**	0.335

Designation	Use From	To	Length	Reference	Weight kg
Modbus cables equipped with 2 RJ45 connectors	Serial port marked SL1/SL2	Ethernet gateway 499 TWD 01100	2.5 m	**XBT Z9980**	–
		Profibus DP LUF P7 or DeviceNet LUF P9, TSX CUSB 485 converter	1 m	**VW3 A8 306 R10**	0.050
			3 m	**VW3 A8 306 R30**	0.150
			0.3 m	**VW3 A8 306 R03**	0.030

Accessories

Designation	Description	Length	Reference	Weight kg
Remote location of the USB port for M238 controllers and XBT GT2●●0…GT7340, GT1●●5, GK●●●, GTW●●● terminals	Used to locate the USB port of M238 controllers (front) and XBTG terminals (rear) remotely on panel or enclosure door (Ø 21 mm fixing device)	1 m	**HMI ZSUSBB**	0.100

(1) RS 485 link delivering a 5 V ⎓/200 mA power supply.
(2) Connection to serial port SL1 on controllers **TM238 LDD24DT** and **TM238 LDA24DR** *or to serial port SL2 on controllers* **TM238 LFDC24DT** and **TM238 LFAC24DR** *via Modbus cable* **XBT Z9980** *(to be ordered separately).*
(3) Connection to serial port SL1 on controller controllers **TM238 LDD24DT** and **TM238 LDA24DR**, *to serial port SL1 or SL2 on controllers* **TM238 LFDC24DT** and **TM238 LFAC24DR** *via Modbus cable* **VW3 A8 306 R●●** *(to be ordered separately).*
Requires a 24 V ⎓ external power supply.
Gateway configurable via the ABC Config Tool software, downloadable from our website www.schneider-electric.com

TSX CUSB 485

References

Connection elements for RS 485 OS download port for M238 version V1.0 (1)

Designation	Use	Length	Reference	Weight kg
USB/RS 485 converter	Used to connect the RS 485 port (SL1) to the USB port on the PC to update the controller operating system. Requires Modbus cable VW3 A8 306 R●● for the PC end) connection at the controller end	0.4 m (integrated cable at	**TSX CUSB 485**	0.144

Replacement parts

Designation	Use	Reference	Weight kg
Removable screw connectors, supplied with Modicon M238 compact bases	Set of 5 removable screw connectors for discrete I/O	**TM238 RSSCT**	0.055
	One 5-way connector with line terminator for CANopen link	**TM238 CNTLSCT**	0.010

(1) For later versions, use the USB port and cable.

Dimensions, mounting

TM238 LDD24DT, TM238 LFDC24DT, TM238 LDA24DR and TM238 LFAC24DR

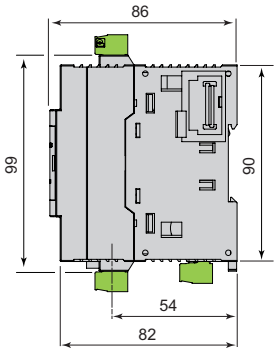

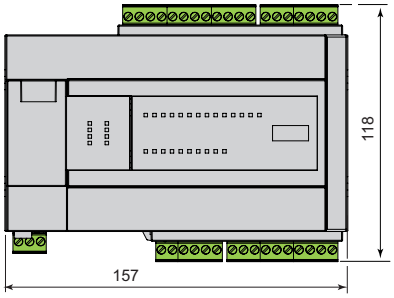

Mounting

On ⊥ rail (1)

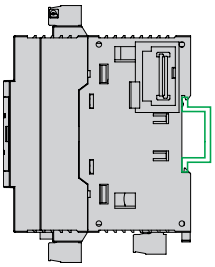

On panel, attached with two M4 screws x 6/8 mm

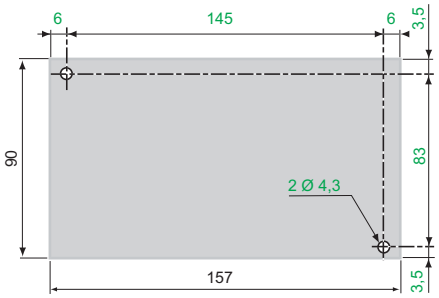

(1) Use of 35 x 15 mm ⊥ rail recommended to ensure vibration resistance (see page 5).

Installation rules

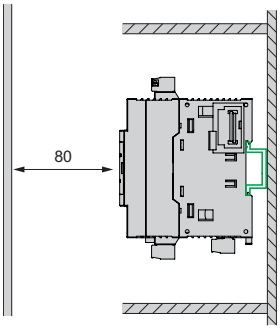

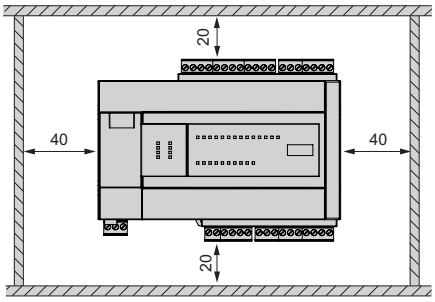

⚠ **Important:**
- Vertical mounting: Possible with extension modules facing up.
- Flat mounting: Not possible.
- Avoid placing heat-generating equipment (transformers, power supplies, power contactor, etc.) below the controller.

Modicon M238 logic controller

Compact bases

Example with Modbus products

Modicon M238 logic controller-based solutions, using the Modbus RS 485 port

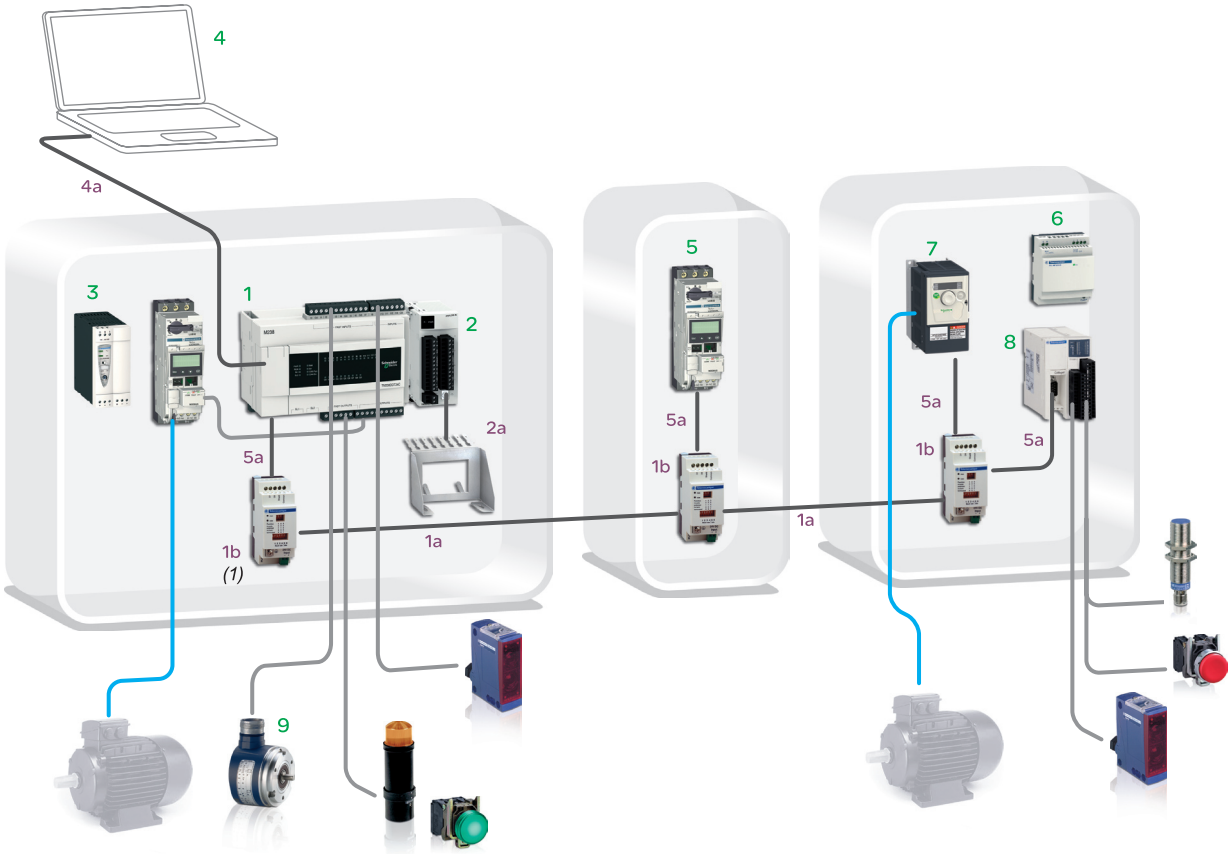

No.	Device	Reference	Description	Voir page
1	Logic controller	**TM238 LDD24DT, TM238 LDA24DR**	Controller with 24 I/O (including 2 inputs used as fast inputs) and SL1 port (Modbus protocol)	10
2	Module with 8 analog inputs	**TM2 ARI 8LT**	Module with eight 2 or 3-wire temperature probe inputs, connected on 2 screw terminal blocks	10
3	Phaseo 24 V ⎓ power supply	**ABL 8REM24●●●**	Optimum power supply, ●●●: **030** for I = 3 A, **050** for I = 5 A	94
4	Programming PC	**MSD CHNSFUV20**	SoMachine software, 1-station license	73
5	TeSysU starter-controller	**LUB 320**	32 A power base with multifunction control unit **LUCM 32BL** and Modbus communication module **LUL C032**	–
6	Phaseo 24 V ⎓ power supply	**ABL 7RM24025●●●●**	Modular power supply 2.5 A	–
7	Altivar 312 variable speed drive	**ATV 312●●●●●●**	Drive for asynchronous motor (integrated Modbus and CANopen)	–
8	Advantys OTB distributed I/O	**OTB 1S0 DM9LP**	Modbus bus interface module, 12 x 24 V ⎓ inputs, 2 x 24 V ⎓ outputs and 6 relay outputs	57
9	Osicoder incremental encoder	**XCC 14●K/15●Y/19●KN**	Rotary Ø 40/58/90 mm with Push-pull outputs with extension **XCC PM23121L●**	–
1a	Modbus trunk cable	**TSX SCA 100/200/500**	RS 485 double shielded twisted pair cables (100/200/500 m)	–
1b	Modbus junction box	**TWD XCA ISO**	Screw terminal block for trunk cable, 2 RJ45 connectors for tap junction, line isolation and line termination. 24 V ⎓ power supply	–
2a	Earthing plate	**TM2 XMTGB**	Connection of cable shielding and functional earth (FE) on module 2	38
4a	Terminal port/PC USB port cordset	**TCS XCN AMUM3P**	Cordset from USB port on Modicon M238 base to PC terminal USB port (3 m)	10
5a	Modbus drop cables	**VW3 A8 306 R03/10/30**	Cable with 2 RJ45 connectors (0.3/1/3 m)	10

(1) Recommended wiring diagram for connecting the Modbus trunk cable on screw terminal block and for distances ⩾ 30 m.

Modicon M238 logic controller

Compact bases

Example with products on CANopen bus

Modicon M238 logic controller-based solutions, using the CANopen integrated port

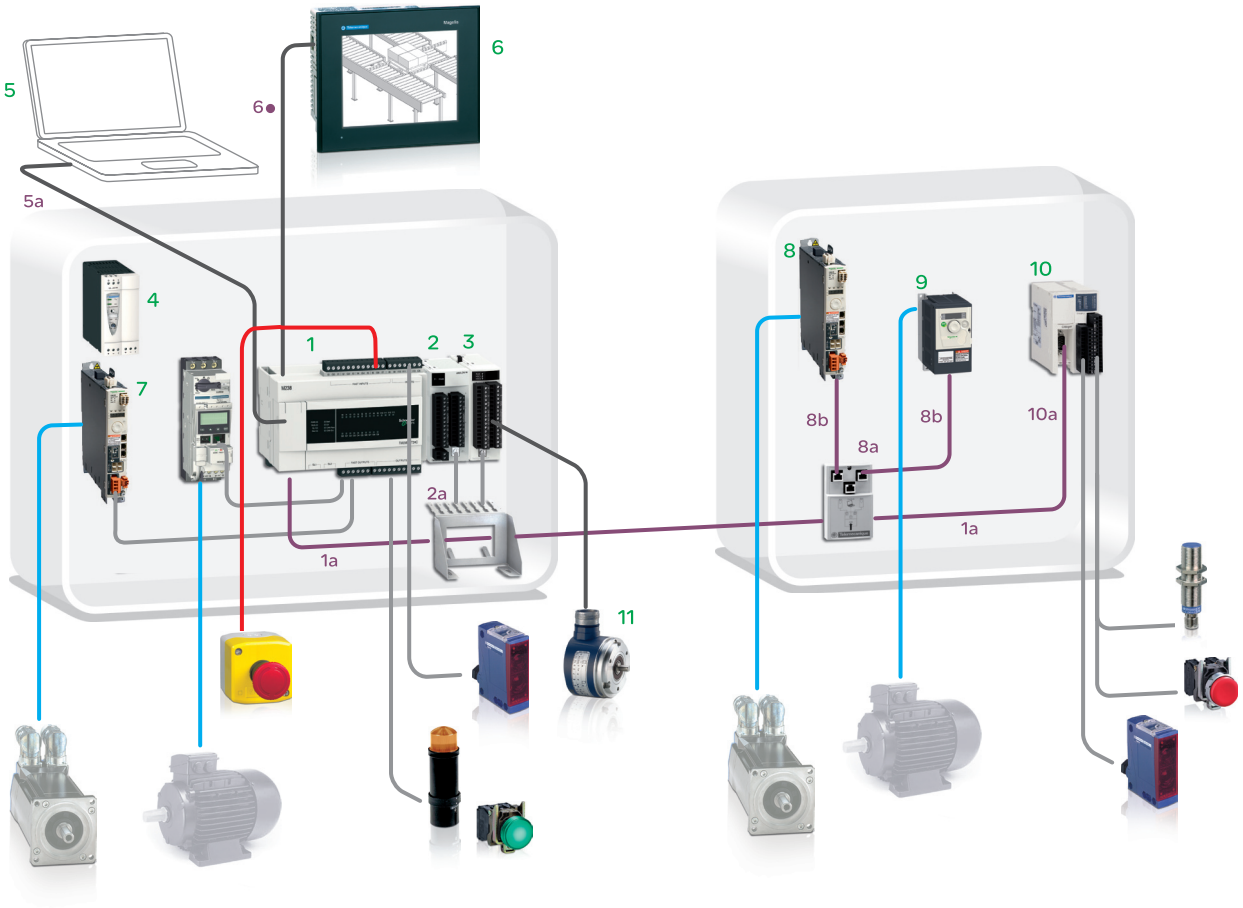

No.	Device	Reference	Description	Voir page
1	Logic controller	**TM238 LFDC24DT**	Controller with 24 I/O (including 2 outputs as PTO signals) and integrated CANopen port	10
		TM238 LFAC24DR	Controller with 24 I/O (without PTO and PMW functionality)	10
2	Module with 8 analog inputs	**TM2 ARI 8LT**	Module with eight 2 or 3-wire temperature probe inputs, connected on 2 screw terminal blocks	38
3	High-speed counter module	**TM200 HSC 206DF**	Module with two 60 kHz high-speed counting channels, connected on 2 spring terminal blocks	48
4	Phaseo 24 V ⎓ power supply	**ABL 8REM24●●●**	Optimum power supply, ●●●: **030** for I = 3 A, **050** for I = 5 A	94
		ABL 8RPS24●●●	Universal power supply, ●●●: **050** for I = 5 A, **100** for I = 10 A	–
5	Programming PC	**MSD CHNSFUV20**	SoMachine software, 1-station license	73
6	Magelis HMI terminal (Modbus protocol)	**XBT N200/R400** + 6a **XBT RT500/RT511** + 6a	Small Panel with keypad for displaying text messages of 2…10 lines. Connection to controller serial port SL2, 5 V ⎓ power supply via controller *(1)*	88
		XBT N401/N410 + 6b **XBT R410/R411** + 6b	Small Panel with keypad for displaying text messages and control/configuration of data, 5.7" screen, external 24 V ⎓ power supply. Connection to controller port SL1 or SL2	88
		XBT GT11●●/ GT1335 + 6a	Advanced Touch Panel with graphic display, 3.8" screen, external 24 V ⎓ power supply. Connection on COM1 port to controller port SL1 or SL2	90
	Magelis HMI terminal (SoMachine-Network protocol)	**XBT GT2●●0…7340** + 6c **XBT GK●●●0** + 6c	Advanced Touch Panel with graphic display, 5.7"…15" screen, external 24 V ⎓ power supply. Connection on COM1 port to controller port SL1 or SL2	–
7	Lexium 32 servo drive	**LXM 32●●●●**	Servo drive on CANopen bus, to be used with BRH/BSH motor	–
8	Lexium 32 servo drive	**LXM 32●●●●**	Servo drive on CANopen bus, to be used with BRH/BSH motor	–
9	Altivar 312 variable speed drive	**ATV 312●●●●●●**	Drive for asynchronous motor (integrated Modbus and CANopen)	–
10	Advantys OTB distributed I/O	**OTB 1C0 DM9LP**	CANopen bus interface module, 12 x 24 V ⎓ inputs, 2 x 24 V ⎓ outputs and 6 relay outputs	57
11	Osicoder incremental encoder	**XCC 14●K/15●Y/19●KN**	Rotary Ø 40/58/90 mm with Push-pull outputs with extension **XCC PM23121L●**	–
1a	CANopen cable	**TSX CAN CA 50/100/300**	Cables for standard environments (50/100/300 m)	66
2a	Earthing plate	**TM2 XMTGB**	Connection of cable shielding and functional earth (FE) on modules 2 and 3	38
5a	Terminal port/PC USB port cordset	**TCS XCN AMUM3P**	Cordset from USB port on Modicon M238 base to PC terminal USB port (3 m)	10
6●	Magelis HMI cordsets	6a **XBT Z9980**	2 RJ45, RS 485 Modbus connectors (2.5 m)	–
		6b **XBT Z938**	1 SUB-D25 and 1 RJ45, RS 485 Modbus (2.5 m)	–
		6c **XBT Z9008**	1 SUB-D9 and 1 RJ45, RS 485 Modbus (2.5 m)	–
8a	IP 20 junction box	**VW3 CAN TAP2**	IP20 junction box with 2 CANopen RJ45 connectors and 1 diagnostic terminal RJ45 connector	66
8b	CANopen preassembled cordset	**VW3 CAN CARR03/1**	Cordset with 1 RJ45 connector at each end (0.3/1 m)	67
10a	IP20 9-way SUB-D connector	**TSX CAN KCDF 90T/180T**	Connector with line terminator, straight/right-angled	66

(1) Except for **XBT RT511**, *connection to controller serial port SL1 or SL2, external 24 V ⎓ power supply.*

Modicon M238 logic controller

Compact bases

Power supply and inputs

Connections

Conductor cross-section and tightening torque on removable screw terminals (power supply and I/O)

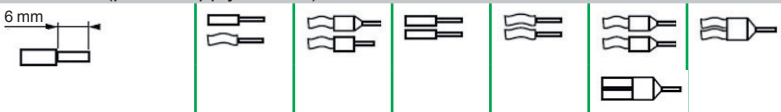

Cross-section (mm²)	0.2…1.5	0.25…1.5	0.2…1	0.2…1.5	0.25…1	0.5…1.5
AWG gauge	24…14	24…14	26…16	24…14	24…16	20…14
Screwdriver				Ø 3.5 mm		
Tightening torque				0.6 Nm, max.		

24 V ⎓ power supply	**100-240 V ∿ power supply**
TM238 LDD24DT/LFDC24DT	**TM238 LDA24DR/LFAC24DR**

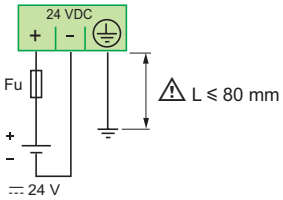

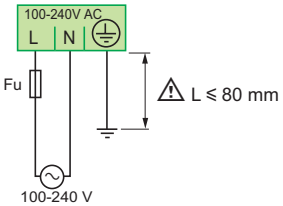

Fu: 2 A fast-blow fuse **ABE 7FU200**

2A Type T fuse

TM238 LDD24DT/LFDC24DT, TM238 LDA24DR/LFAC24DR bases

24 V ⎓ inputs

Fast sink inputs (positive logic)

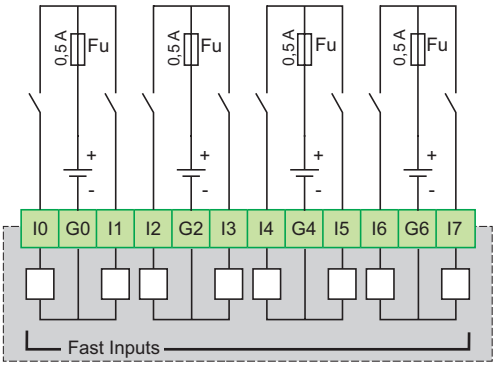

Fu: 0.5 A fast-blow fuse

Sink/source inputs (positive/negative logic)

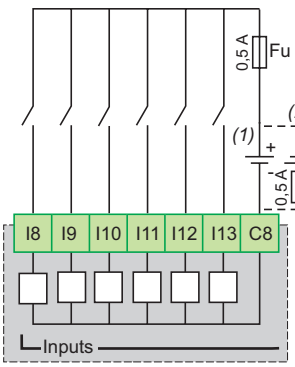

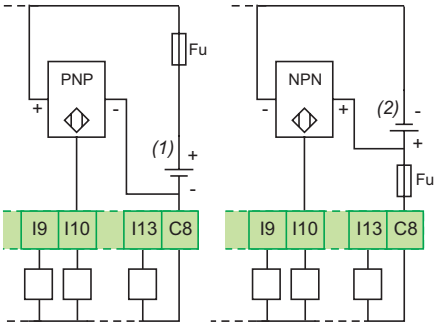

Example of connection of 3-wire PNP *(1)* and NPN *(2)* sensors

Fu: 0.5 A fast-blow fuse

(1) Sink inputs (positive logic)
(2) Source inputs (negative logic)

Connections (continued)

TM238 LDD24DT/LFDC24DT bases

24 V ⎓ solid state outputs

Fast outputs (positive logic/negative logic)

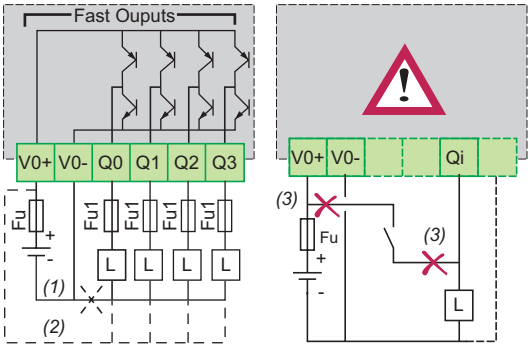

Source outputs (positive logic)

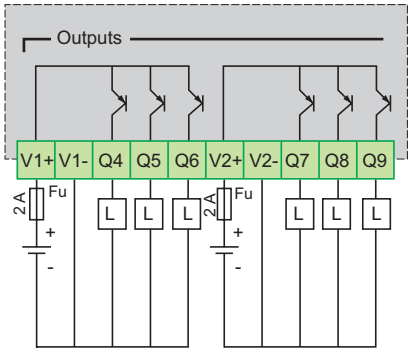

Note: *The power supply for the outputs must be placed:*
- Close to the Modicon M238 base with a connection < 3 m
- Or close to the preactuators for connections with the base Modicon M238 > 10 m. The cables for connection to the preactuators and the power supply must be within a single strand or be routed in the same cable duct.

Fu: 2 A fast-blow fuse.
Fu1: fast-blow fuse: 0,1A for PTO use, 0,5A for standard use.
(1) ——— Outputs positive logic cabling.
(2) – – – – Outputs negative logic cabling.
(3) Never connect a positive polarity to fast outputs Q0, Q1, Q2 and Q3.

TM238 LDA24DR/LFAC24DR bases

24 V ⎓ solid state outputs and relay outputs

Solid state outputs

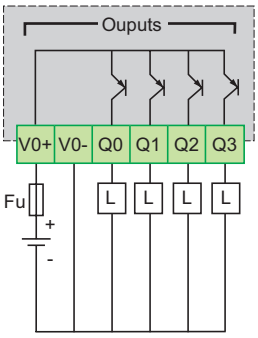

Fu: 2 A fast-blow fuse

Relay outputs

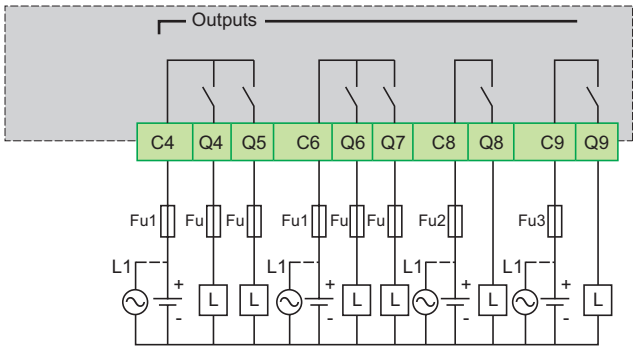

Fu: 2A fast-blow fuse
Fu1: 4 A delayed fuse
Fu2: 2 A delayed fuse
Fu3: 5 A delayed fuse

Terminal cabling for Bus CANopen (with models **TM238 LFDC24DT** and **TM238 LFAC24DR**)

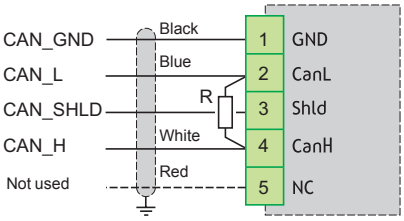

- Connection with CANopen 4-wire cable **TSX CAN CA/CB/CD ●00** (50, 100 or 300 m).
- Colour of conductors: black, blue, white and red
- R: 120 Ω line termination resistor (supplied with the CANopen screw terminal block)
- Terminal 3 (Shld): for connecting the CANopen cable shielding
- Terminal 5 (NC): not used

Serial links SL1 and SL2

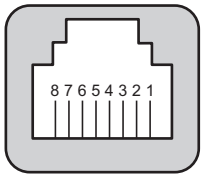

Compact base		TM238 LDD24DT/LDA24DR		TM238 LFDC24DT/LFAC24DR		
Link number		SL1		SL1		SL2
Physical interface		RS 232	RS 485	RS 232	RS 485	RS 485
	1	RXD	–	RXD	–	–
	2	TDX	–	TDX	–	–
	3	RTS	–	RTS	–	–
	4	–	D1 (A+)	–	D1 (A+)	D1 (A+)
	5	–	D0 (B-)	–	D0 (B-)	D0 (B-)
	6	CTS	–	CTS	–	–
	7	+ 5 V, for HMI power supply	+ 5 V, for HMI power supply	–	–	+ 5 V, for HMI power supply
	8	0 V common	0 V common	0 V common	0 V common	0 V common

Connections (continued)

Connection of 24 V ⎓ fast inputs

Using 2 incremental encoders with phase-shifted signals without TDC

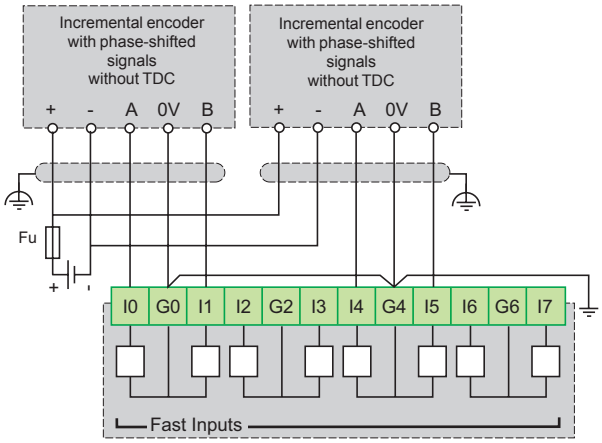

Using 2 incremental encoders with phase-shifted signals with TDC

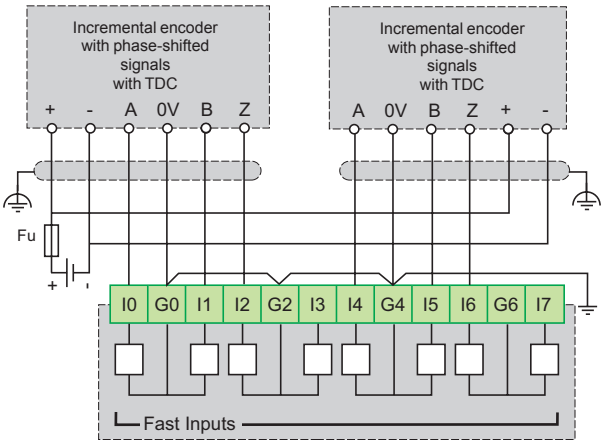

Note: It is possible to use the available fast inputs I2, I3, I6, and I7 as "normal mode" inputs: 30 m unshielded cables max. and separate 24 V ⎓ power supply from the specific auxiliary power supply for the fast inputs.

Using 1 incremental encoder with phase-shifted signals without TDC and 1 electromechanical sensor

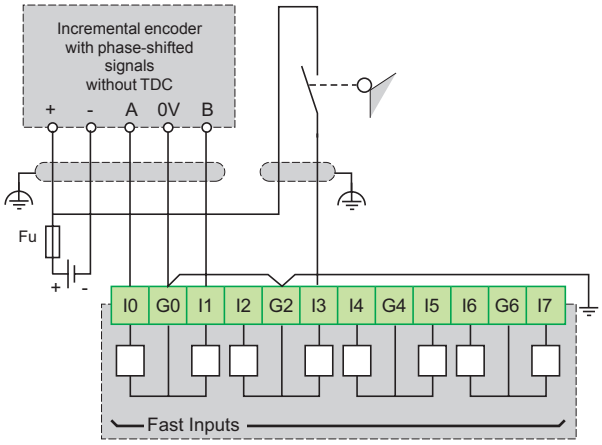

Using 1 incremental encoder with phase-shifted signals with TDC and one 3-wire PNP sensor

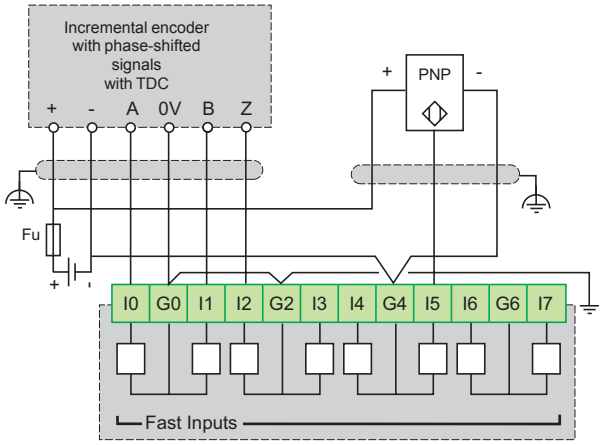

Cordsets with mandatory shielding: 10 m max. and shielding to be connected to the metal support for mounting the Modicon M238 controller.

Specific auxiliary power supply for the encoders and sensors connected to the fast inputs and used in "fast counter" mode.

Fu 0.5 A fast-blow fuse.

Connection of 24 V ⎓ fast outputs (TM238 LDD24DT, TM238 LFCD24DT)

Using actuators with USIC type PTO/PWM signals

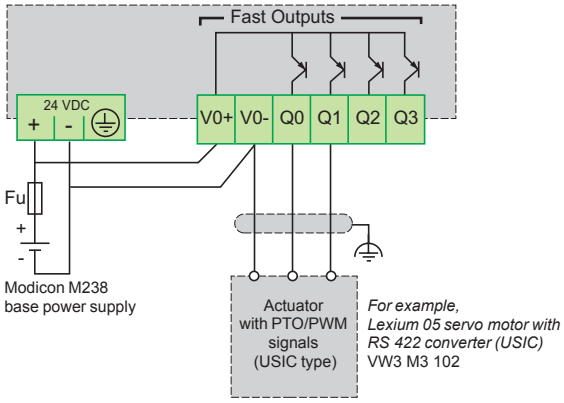

Using actuators with PTO/PWM signals delivering a 24 V ⎓ power supply

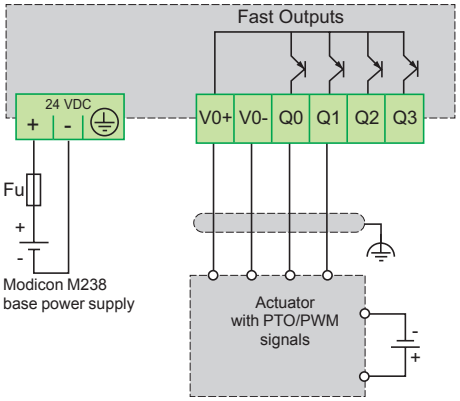

Cordsets with mandatory shielding: 10 m max. and shielding to be connected to the metal support for mounting the Modicon M238 controller.

Principle

In order to protect against external interference, cables and cordsets carrying the signals below must be shielded:

- Incremental encoders and sensors connected to the fast inputs and used in counter mode (> 100 Hz)
- Actuators with PTO/PWM signals connected to the fast outputs for **TM238 LDD24DT** and **TM238 LFCD24DT**
- Sensors and actuators connected to the extension modules' analog I/O
- Serial links and CANopen buses

The use of shielded cables requires compliance with the following wiring rules:

- Shielding 360° connected to earth at both ends of the cables. Metal conduit or ducting can be used for part of the shielding length provided that there is no break in the continuity of the earth connections.
- Keep cables carrying signals of different categories as far apart as possible.

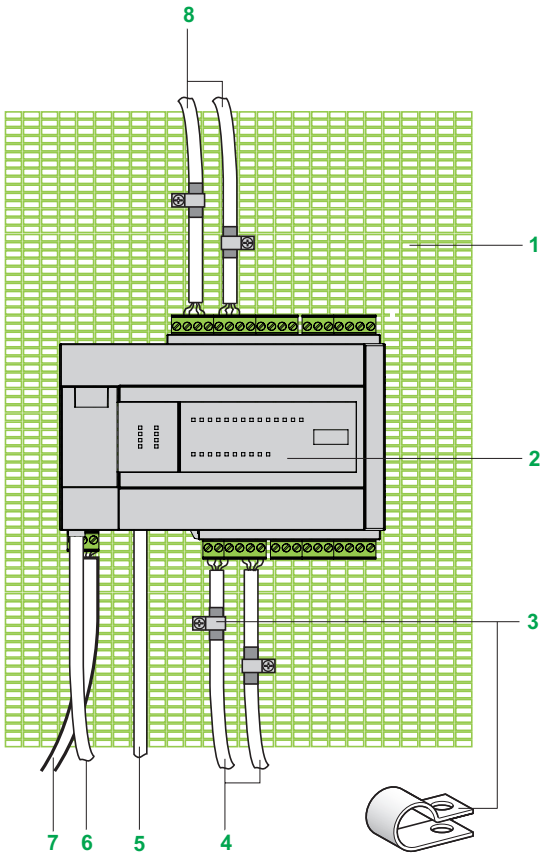

Installation diagram for Modicon M238 controller

1 Metal plate or metal panel (earthed casing) connected to the device's protective earth (PE)

2 Modicon M238 logic controller

3 **Shielding connection clamp TM200 RSRCEMC:** Attach and earth the shielding of cables 4 and 8 as close as possible to the controller base:
- Strip the shielding (on the clamp)
- Attach the cable to the metal support 1 by attaching the clamp to the stripped part of the shielding.

The shielding must be clamped tightly enough to the metal support to ensure good contact.

4 Shielded cables for connecting the fast outputs to the actuators with PTO/PWM signals

5 Shielded cordset for connecting serial links SL1 and SL2 (**TCS MCN 3M4●●●2** cordsets include the earthing lug).
Use "**TM200 RSRCEMC** shielding connection clamp" in the serial lines cable 5

6 Shielded cable for connecting the CANopen bus. The shielding is connected to terminal 3 on the connection terminal block (see page 11).
Use "**TM200 RSRCEMC** shielding connection clamp" in the CANopen cable 6

7 Unshielded power supply wires or cable (2 conductors + Earth)

8 Shielded cable for connecting the encoder and sensor signals used on the fast inputs in counter mode

Note: *The shielding of the shielded cables used for connecting the sensors/actuators to the analog I/O extension modules should be attached and earthed via earthing plate* **TM2 XMTGB** *(see page 40).*

Note: *These shielding connections do not remove the need to connect the PE protective conductors (green-yellow) to the appropriate terminals on each unit or product.*

Modicon M238 logic controller

Discrete I/O extension modules

Applications	Type of extension modules	**Discrete inputs with removable screw terminal block**		
	Compatibility	- Modicon M238 logic base controllers - Twido compact and modular controllers - Magelis HMI Controller - Modicon OTB I/O distributed Interfaces		
				
Number and type		8 ⎓ 24 V inputs	8 ∿ 120 V inputs	16 ⎓ 24 V inputs
Connection		By removable screw terminal block		
Inputs	Voltage range	⎓ 20.4...28.8 V	∿ 85...132 V	⎓ 20.4...28.8 V
	Input current	7 mA per channel	7.5 mA per channel	7 mA per channel
	Input logic	Sink/source *(1)*	–	Sink/source *(1)*
	Commons	1 x 8 channels	1 x 8 channels	1 x 16 channels
	Response time □ Off-on	4 ms	25 ms	4 ms
	□ On-off	4 ms	30 ms	4 ms
Outputs	Output types			
	Voltage range			
	Commons			
	Output current □ Per output			
	□ Per group of channels			
Isolation	Between channels	None		
	Between channels and internal logic	500 V rms ∿ for 1 min	1500 V rms ∿ for 1 min	500 V rms ∿ for 1 min
I/O module type		**TM2 DDI 8DT**	**TM2 DAI 8DT**	**TM2 DDI 16DT**
Pages		26		

(1) Sink input: positive logic, source input: negative logic.

Discrete inputs with HE10 connector		Discrete I/O with removable screw terminal block	Discrete I/O with non-removable spring terminal block
- Modicon M238 logic base controllers - Twido compact and modular controllers - Magelis HMI Controller - Modicon OTB I/O distributed Interfaces			
			
16 ⎓ 24 V inputs	32 ⎓ 24 V inputs	4 ⎓ 24 V inputs/4 relay outputs	16 ⎓ 24 V inputs/8 relay outputs
By HE10 connector Allows use of the Modicon Telefast ABE 7 pre-wired system		By removable screw terminal block	By non-removable spring terminal block
⎓ 20.4...28.8 V		⎓ 20.4...28.8 V	
5 mA per channel		7 mA per channel	
Sink/source *(1)*		Sink/source *(1)*	
1 x 16 channels	2 x 16 channels	1 x 4 channels	1 x 16 channels
4 ms		4 ms	
4 ms		4 ms	
		1 N/O contact	
		∿ 240 V, ⎓ 30V	
		1 x 4 channels	2 x 4 channels
		2 A (Ith)	
		7 A (Ith)	
None		None between input channels, none between output channels	
		Between input group and output groups: 1500 V rms ∿ for 1 min	
		Between output groups: 1500 V rms ∿ for 1 min	
500 V rms ∿ for 1 min		Between input channels and internal logic: 500 V rms ∿ for 1 min	
		Between output channels and internal logic: 2300 V rms ∿ for 1 min	
TM2 DDI 16DK	**TM2 DDI 32DK**	**TM2 DMM 8DRT**	**TM2 DMM 24DRF**
26			

Modicon M238 logic controller

Discrete I/O extension modules

Applications	Type of extension modules	**8/16 outputs with removable screw terminal block**			
	Compatibility	- Modicon M238 logic base controllers - Twido compact and modular controllers - Magelis HMI Controller - Modicon OTB I/O distributed Interfaces			




Type		8 ⎓ 24 V transistor outputs		8 relay outputs	16 relay outputs
Connection		By removable screw terminal block			
Outputs	Output types	Transistor		Relay with 1 N/O contact	
	Voltage range	⎓ 20.4..28.8 V		∿ 240 V, ⎓ 30 V	
	Logic *(1)*	Sink	Source	–	
	Commons	1 x 8 channels		2 x 4 channels	2 x 8 channels
	Output current □ Per output	0.3 A max.	0.5 A max.	2 A max.	
	□ Per group of channels	3 A at 28.8 V	4 A at 28.8 V	7 A max.	8 A max.
	Protection against overload and short-circuit	–	Yes, with automatic reactivation on elimination of the fault	–	
Isolation	Between channels	None		None	
	Between group of channels	–		1500 V rms for 1 min	
	Between channels and internal logic	500 V rms ∿ for 1 min		2300 V rms ∿ for 1 min	
Output module type		**TM2 DDO 8UT**	**TM2 DDO 8TT**	**TM2 DRA 8RT**	**TM2 DRA 16RT**
Pages		26			

(1) Source output: positive logic, sink output: negative logic.

16/32 outputs with HE 10 connectors

- Modicon M238 logic base controllers
- Twido compact and modular controllers
- Magelis HMI Controller
- Modicon OTB I/O distributed Interfaces




16 ⎓ 24 V transistor outputs	16 ⎓ 24 V transistor outputs	32 ⎓ 24 V transistor outputs	32 ⎓ 24 V transistor outputs
By HE10 connector	By HE10 connector Allows use of the Modicon Telefast ABE 7 pre-wired system	By HE10 connector	By HE10 connector Allows use of the Modicon Telefast ABE 7 pre-wired system
Transistors			
⎓ 20.4...28.8 V			
Sink	Source	Sink	Source
1 x 16 channels		2 x 16 channels	
0.1 A max.	0.4 A max.	0.1 A max.	0.4 A max.
1 A at 28.8 V	2 A at 28.8 V	1 A at 28.8 V	2 A at 28.8 V
–	Yes, with automatic reactivation on elimination of the fault	–	Yes, with automatic reactivation on elimination of the fault
None			
–			
500 V rms ∿ for 1 min			
TM2 DDO 16UK	**TM2 DDO 16TK**	**TM2 DDO 32UK**	**TM2 DDO 32TK**

26

Presentation

The offer discrete I/O extension modules includes input modules, output modules and mixed input/output modules. With the 15 I/O modules offered, in addition to the I/O integrated in 24 I/O compact base controllers and modular base controllers, configurations can be adapted to best suit application requirements, so optimising costs.

The following discrete I/O modules are available:
■ Four ⎓ 24 V discrete input modules comprising an 8, 16 and a 32-channel module, equipped with either removable screw terminal blocks or HE 10 connector, depending on the model. These modules can be either “sink or source” .
■ One ∿ 120 V discrete input module, 8 channels, equipped with a removable screw terminal block.
■ Eight discrete output modules comprising two output modules with 8 and 16 relay outputs, output modules with 8, 16 or 32-channel “sink” or “source” transistor outputs, equipped with either removable screw terminal blocks or HE 10 connector, depending on the model.
■ Two mixed discrete input and output modules, comprising one 4-channel input/4-channel relay output module with removable screw terminal block and one 16-channel input/8-channel relay output module with non-removable spring terminal block.

The narrow width of these I/O modules (17.5 mm, 23.5 mm, 29.7 mm or 39.1 mm) makes it possible to build Modicon M238, Twido or Modicon OTB configurations of up to 248 I/O with a minimal overall size of L 364.9 mm x H 90 mm x D 81.3 mm.

Discrete I/O extension modules and the analogue I/O modules are connected to the different base controller according to the following rules:
■ Modicon M238 24 I/O compact base controllers, **TM238 L●●●●●●** : 7 modules max.
■ Twido 24 E/S compact base controllers, **TWD LC●A 24DRF**: 4 modules max.
■ Twido 40 E/S compact base controllers, **TWD LC●● 40DRF**: 7 modules max.
■ Twido 20 E/S modular base controllers, **TWD LMDA 20D●K**: 4 modules max.
■ Twido 20 E/S and 40 E/S modular base controllers, **TWD LMDA 20DRT/40D●K**: 7 modules max.
■ Magelis HMI Controller, **XBT GC1100●**: 2 modules max.
■ Magelis HMI Controller, **XBT GC2●●0●**: 3 modules max
■ Modicon OTB Interface 20 E/S, **OTB 1●0 DM9LP**: 7 modules max.

All the discrete I/O modules are electrically isolated with the use of a photocoupler between the internal electronic circuit and the input/output channels.

Description

Discrete I/O extension modules comprise:
1 An extension connector for electrical connection to the previous module *(1)*.
2 One or two blocks for displaying the channels and module diagnostics.
3 One or two connection components of varying type, depending on the model:
■ removable screw terminal block (1 or 2) for modules whose reference ends in **T**,
■ HE 10 connector (1 or 2) for modules whose reference ends in **K**,
■ non-removable spring terminal block for module **TM2 DMM 24DRF**.
4 Latching mechanism for attachment to the previous module.

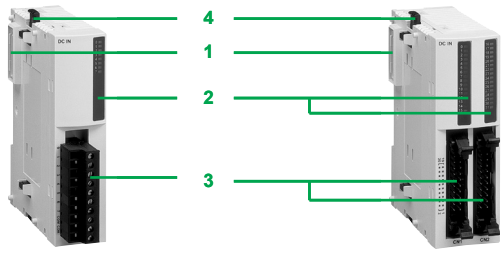

Module with removable screw terminal block

Module with HE 10 connector

These modules are mounted on a symmetrical ⊥ rail. Fixing kit **TWD XMT 5** (supplied in lots of 5) allows plate or panel mounting. For modules with removable screw terminal block, the terminal blocks are supplied with the module.

The **OTB 9ZZ 61JP** supply common distribution module (2 isolated groups of 10 terminals) simplifies the wiring of supply commons of sensors or actuators via 2 removable screw terminal blocks.

(1) A connector on the right-hand side ensures continuity of the electrical link with the next I/O module.

Characteristics : page 23
References : pages 26 …
Dimensions : page 28
Connections : pages 28 …

Characteristics of ⎓ input channels

Type of modules		TM2		DAI 8DT	DDI 8DT	DDI 16DT	DDI 16DK	DDI 32DK	DMM 8DRT	DMM 24DRF
Number of input channels				8		16		32	4	16
Nominal input voltage			**V**	∼ 120 V	⎓ 24 sink/source					
Connection				Removable screw terminal block			HE 10 connector		Removable screw term -inal block	Spring terminal block
Commons				1 x 8 channels		1 x 16 channels		2 x 16 channels	1 x 4 channels	1 x 16 channels
Input limit values (at states 0 and 1 garanted)			**V**	∼ 85…132 V	⎓ 20.4...28.8	⎓ 20.4...28.8 *(1)*			⎓ 20.4...28.8	⎓ 20.4...28.8 *(1)*
Nominal input current			**mA**	7.5	7		5		7	
Input impedance			**kΩ**	11	3,4		4,4		3,4	
Response time	At state 1		**ms**	25	4		4		4	
	At state 0		**ms**	30	4		4		4	
Isolation	Between channels			None						
	Between input groups and output groups		**V rms**	–	–				1500 for 1 min	
	Between channels & internal logic		**V rms**	1500 for 1 min	500 for 1 min				500 for 1 min	
Max. consumption on internal extension bus	All inputs at state 1	⎓ 5 V	**mA**	55	25	40	35	65	25 *(2)*	65 *(2)*
		⎓ 24 V	**mA**	0					20 *(2)*	45 *(2)*

(1) Derating temperature curves depends on nominal input voltage, see page 29.
(2) Consumption values are indicated for all mixte inputs/output modules at state 1.

Characteristics of transistor output modules

Type of modules		TM2		DDO 8UT	DDO 8TT	DDO 16UK	DDO 16TK	DDO 32UK	DDO 32TK
Number of output channels				8		16		32	
Output logic *(1)*				Sink	Source	Sink	Source	Sink	Source
Connection				Removable screw terminal block		HE 10 connector			
Commons				1 x 8 channels		1 x 16 channels		2 x 16 channels	
Nominal output values	Voltage		**V**	24					
	Current		**A**	0,3	0,5	0,1	0,4	0,1	0,4
Output limit values	Voltage		**V**	20.4…28.8					
	Current per channel		**A**	0.36	0.6	0.12	0.48	0.12	0.48
	Current per common		**A**	3	4	1	2	1	2
Response time	State 0 to state 1		**µs**	300	450	300	450	300	450
	State 1 to state 0		**µs**	300	450	300	450	300	450
Leakage current			**mA**	–	0,1	–	0,1	–	0,1
Residual voltage	At state 1		**V**	≤ 1	≤ 0.4	≤ 1	≤ 0.4	≤ 1	≤ 0.4
Inductive load	L/R		**ms**	–	≤ 10	–	≤ 10	–	≤ 10
Internal protection of the outputs against overload and short-circuit	with automatic reactivaton			No	Yes	No	Yes	No	Yes
Maximum power of filament lamp			**W**	8	12	8	9,6	8	9,6
Isolation	Between channels			None					
	Between channels & int. logic		**V rms**	500 for 1 min					
Max. consumption on internal extension bus	All outputs at state 1	⎓ 5 V	**mA**	10		10	15	20	25
		⎓ 24 V	**mA**	20		40	20	70	40

(1) Source output: positive logic, sink output: negative logic.

Characteristics of relay output channels

Type of modules			TM2		DRA 8RT	DRA 16RT	DMM 8DRT	DMM 24DRF
Number of output channels					8 NO contacts	16 NO contacts	4 NO contacts	8 NO contacts
Connection					Removable screw terminal block			Non removable spring terminal block
Output currents		Current per channel		**A**	2 (5 max. surge current)			
		Max. Current per common		**A**	7	8	7	
Commons					2 x 4 channels	2 x 8 channels	1 x 4 channels	2 x 4 channels
Minimum switching load				**mA**	0,1 under ⎓ 0,1 V			
Contact resistance		When new		**mΩ**	45 max.			
Mechanical life time		Unload			20 x 10^6 operations			
Loads on relay outputs	Resistive	e.g.: heating element			Electric life time : 1 x 10^5 operations min.: - 2 A at ∼ 240 V - 2 A at ⎓ 30 V with 600 operations max./hour			
	Inductive with protection *(1)*	e.g.: relay, solenoid valve			Electric life time : 1 x 10^5 operations min.: - régime inductif AC-15 : ∼ 240 V 1 A, cos φ = 0,7 - régime inductif AC-15 : ∼ 240 V 0,5 A, cos φ = 0,35 - régime inductif DC-13 : ⎓ 24 V 1 A, L/R = 7 ms			
	Capacitive	e.g.: TeSys U starters, Festo solenoid valves			Use of relay outputs not guaranteed (reduction of life). For this type of application, **it is advisable to use the transistor outputs** of extension modules TM2 DDO ●●●●			
Response time		State 0 to state 1		**ms**	⩽ 10			
		State 1 to state 0		**ms**	⩽ 5			
Isolation voltage		Between channels		**V rms**	1500 for 1 min		None	
		Between output groups		**V rms**	1500 for 1 min			
		Between input groups and output groups		**V rms**	–		1500 for 1 min	
		Between channels & internal logic		**V rms**	2300 for 1 min			
Max. consumption on internal extension bus		All outputs at state 1	⎓ 5 V	**mA**	30	45	25 *(2)*	65 *(2)*
			⎓ 24 V	**mA**	40	75	20 *(2)*	45 *(2)*

(1) Inductive load fitted with a protection device such as an RC peak limiter or flywheel diode.
(2) Consumption values are indicated for all inputs/outputs at state 1.

Modicon M238 logic controller

Discrete I/O extension modules

References

These discrete I/O modules are mounted as standard on symmetrical ⊥⊥ rails to the right of the Twido base controller. The maximum number of discrete and/or analogue I/O modules which may be mounted depends on the type of base controller:

Base controller type	Twido compact TWD				Twido modular TWD			Modicon M238	Magelis HMI Controller		Modicon OTB Interface
	LC●A 10DRF	LC●A 16DRF	LC●A 24DRF	LC●● 40DRF	LMDA 20D●K	LMDA 20DRT	LMDA 40D●K	TM238 L●●●●●●	XBT GC 1100●	XBT GC 2●●0●	OTB 1●0 DM9LP
Number of modules	0	0	4	7	4	7	7	7	2	3	7

TM2 DDI 8DT

TM2 DDI 32DK

TM2 DDO 8●T/DRA 8RT

TM2 DDO 16●K

TM2 DDO 32●K

TM2 DRA 16RT

TM2 DDM 8DRT

TM2 DDM 24DRF

Discrete input modules

Input voltage	Nb of channels	Nb of common points	Connection	Reference	Weight kg
⎓ 24 V sink/source	8	1	Removable screw terminal block (supplied)	**TM2 DDI 8DT**	0.085
	16	1	Removable screw terminal block (supplied)	**TM2 DDI 16DT**	0.100
			HE 10 connector	**TM2 DDI 16DK** *(1)*	0.065
	32	2	HE 10 connector	**TM2 DDI 32DK** *(1)*	0.100
∼ 120 V	8	1	Removable screw terminal block (supplied)	**TM2 DAI 8DT**	0.081

Discrete output modules

Type de sortie	Nb of channels	Nb of common points	Connection	Reference	Weight kg
Transistors ⎓ 24 V	8, sink 0.3 A	1	Removable screw terminal block (supplied)	**TM2 DDO 8UT**	0.085
	8, source 0.5 A	1	Removable screw terminal block (supplied)	**TM2 DDO 8TT**	0.085
Transistors ⎓ 24 V	16, sink 0.1 A	1	HE 10 connector	**TM2 DDO 16UK**	0.070
	16, source 0.4 A	1	HE 10 connector	**TM2 DDO 16TK** *(1)*	0.070
	32, sink 0.1 A	2	HE 10 connector	**TM2 DDO 32UK**	0.105
	32, source 0.4 A	2	HE 10 connector	**TM2 DDO 32TK** *(1)*	0.105
Relay 2 A (Ith) ∼ 230 V/⎓ 30 V	8 (N/O contact)	2	Removable screw terminal block (supplied)	**TM2 DRA 8RT**	0.110
	16 (N/O contact)	2	Removable screw terminal block (supplied)	**TM2 DRA 16RT**	0.145

Discrete mixed input/output modules

Nb of I/O	Nb, type of input	Nb, type of output	Nb of common points	Connection	Reference	Weight kg
8	4 I, ⎓ 24 V sink/source	4 O, relay (N/O contact) 2 A (Ith)	Inputs: 1 common Outputs: 1 common	Removable screw terminal block (supplied)	**TM2 DMM 8DRT**	0.095
24	16 I, ⎓ 24 V sink/source	8 O, relay (N/O contact) 2 A (Ith)	Inputs: 1 common Outputs: 2 commons	Non-removable spring terminal block	**TM2 DMM 24DRF**	0.140

(1) Module that allows use of the Modicon Telefast ABE 7 pre-wired system.

Modicon M238 logic controller

Discrete I/O extension modules

OTB 9ZZ 61JP

References

Separate components

Description	Application	Reference	Weight kg
Fixing kit Sold in lots of 5	For plate or panel mounting of the discrete modules.	**TWD XMT 5**	0.065
Commun distribution module	For distribution of supply commons. 8 A max. Connection on 2 removable screw terminal blocks	**OTB 9ZZ 61JP**	0.100
Modicon Telefast ABE 7 pre-wired system	Connection sub-bases I/O connection sub-bases Pre-wired solutions Cables and accessories	See page 78	–

Description	Number of ways	Reference	Weight kg
HE 10 female connectors Sold in lots of 5	20	**TWD FCN 2K20**	–
	26	**TWD FCN 2K26**	–

Pre-formed cables for discrete I/O modules with HE 10 connectors

Description	For use with Twido	Gauge C.s.a.	Cable length	Reference	Weight kg
Pre-formed cables 1 pre-formed cable: one end fitted with HE 10 connector, one end with free wires	I/O extensions TM2 DDI 16DK/32DK TM2 DDO 16●K/32●K	AWG 22 0.035 mm²	3 m	**TWD FCW 30K**	0.405
		AWG 22 0.035 mm²	5 m	**TWD FCW 50K**	0.670

Pre-formed connecting cables *(1)*

Description	Association	Jauge Section	Longueur cordon	Reference	Weight kg
Discrete input pre-formed cables, 1 pre-formed cable: one end with 20-way HE 10 connector on TM2 side, one end with 20-way HE 10 connector on sensor side	Inputs TM2 DDI 16DK/32DK	AWG 28 0.080 mm²	1 m	**ABF TE20EP100**	0,080
		AWG 28 0.080 mm²	2 m	**ABF TE20EP200**	0.140
		AWG 28 0.080 mm²	3 m	**ABF TE20EP300**	0.210
Discrete output pre-formed cables 1 pre-formed cable: one end with 20-way HE 10 connector on TM2 side, one end with 20-way HE 10 connector on preactuator side	Outputs TM2 DDO 16TK/32TK	AWG 28 0.080 mm²	1 m	**ABF TE20SP100**	0,080
		AWG 28 0.080 mm²	2 m	**ABF TE20SP200**	0.140
		AWG 28 0.080 mm²	3 m	**ABF TE20SP300**	0.210

(1) Cables strictly for applications other than use of Modicon Telefast ABE 7 sub-bases with Twido controllers. For use of Modicon Telefast ABE 7 sub-bases with Twido controllers, see page 75.

Dimensions

Discrete I/O modules

TM2	a	c
DDI 8DT/DAI 8DT	23,5	14,6
DDI 16DT	23,5	14,6
DDI 16DK	17,6	11,3
DDI 32DK	29,7	11,3
DDO 8UT/8TT	23,5	16,6
DDO 16UK/16TK	17,6	11,3
DDO 32UK/32TK	29,7	11,3
DRA 8RT/16RT	23,5	14,6
DMM 8DRT	23,5	14,6
DMM 24DRF	39,1	1,0

OTB	a	c
9ZZ 61JP	23,5	14,6

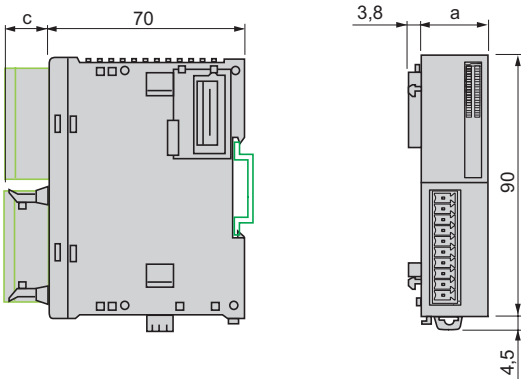

Connections

ABF TP26MP●00 *(1)*

HE 10 26-way **A** Twido side	HE 10 20-way **B** Sensor side	HE 10 20-way **C** Preactuator side
1	–	18
2	20	–
3	–	20
4	12	–
5	–	17
6	11	–
7	–	19
8	10	–
9	–	–
10	9	–
11	–	8
12	8	–
13	–	7
14	7	–
15	–	6
16	6	–
17	–	5
18	5	–
19	–	4
20	4	–
21	–	3
22	3	–
23	–	2
24	2	–
25	–	1
26	1	–

ABF TE20EP●00 *(1)*

HE 10 20-way **A** TM2 side	HE 10 20-way **B** Sensor side
1	–
2	–
3	18
4	20
5	16
6	8
7	15
8	7
9	14
10	6
11	13
12	5
13	12
14	4
15	11
16	3
17	10
18	2
19	9
20	1

ABF TE20SP●00 *(1)*

HE 10 20-way **A** TM2 side	HE 10 20-way **B** Preactuator side
1	18
2	20
3	19
4	17
5	16
6	8
7	15
8	7
9	14
10	6
11	13
12	5
13	12
14	4
15	11
16	3
17	10
18	2
19	9
20	1

(1) Cordsets do not be associated with a Modicon Telefast ABE 7 bases.
For Modicon Telefast ABE 7 bases association, see page 75.

OTB 9ZZ 61JP

Exemples of connection: input module **TM2 DDI 8DT** with distribution module of supply commons **OTB 9ZZ 61JP**

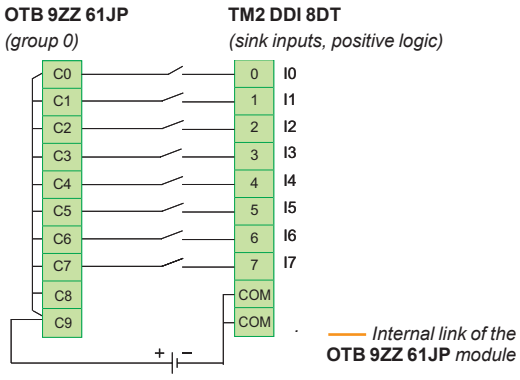

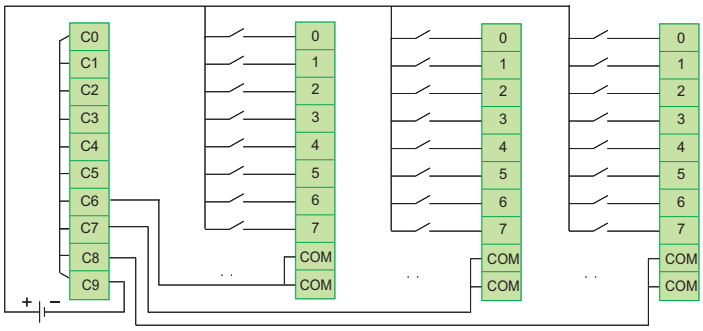

Connections

Input modules

TM2 DDI 8DT (⎓ 24 V)

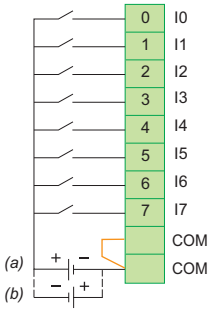

TM2 DAI 8DT (∿ 120 V)

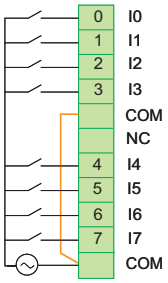

TM2 DDI 16DK (⎓ 24 V)

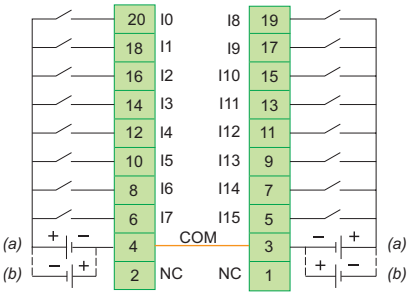

TM2 DDI 16DT (⎓ 24 V)

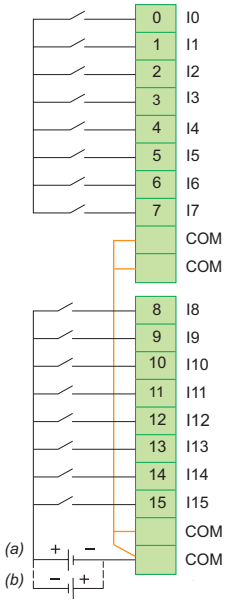

TM2 DDI 32DK (⎓ 24 V)

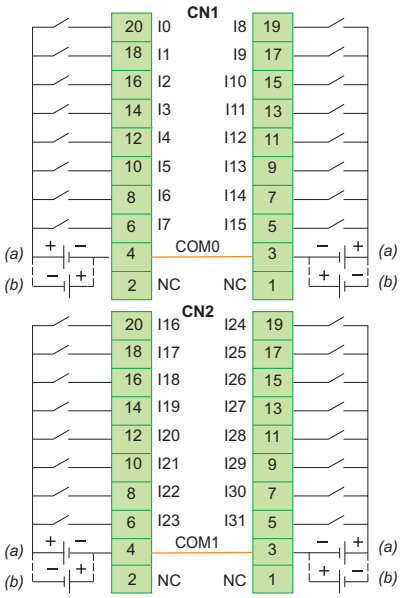

(a) Sink input (positive logic).
(b) Source input (negative logic).
COM or COM● internal links.

Temperature derating curves of input modules

TM2 DDI 16DT

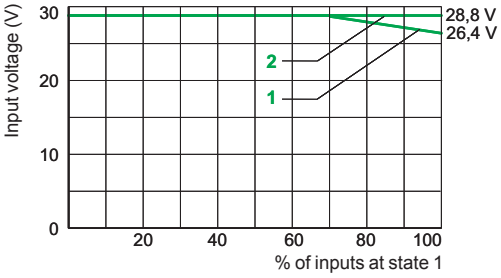

1 Input voltage at 45 °C
2 Input voltage at 55 °C

TM2 DDI 16DK/32DK

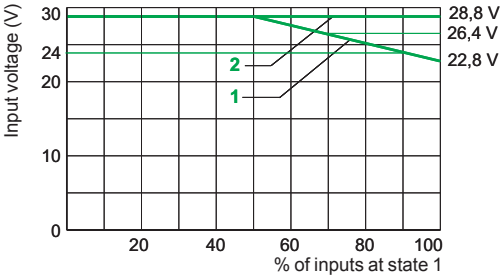

1 Input voltage at 30 °C
2 Input voltage at 55 °C

Connections (continued)

Transistor output modules

TM2 DDO 8UT

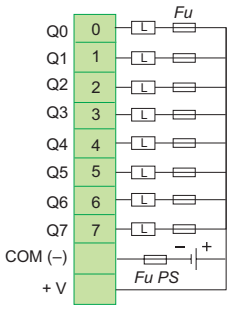

Fu: 0.3 A fast-blow fuse
Fu PS: 4 A delayed fuse

TM2 DDO 8TT

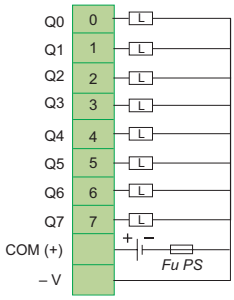

Fu PS: 4 A delayed fuse

TM2 DDO 16UK

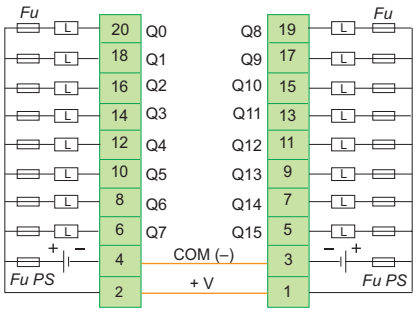

Fu:
0.1 A fast-blow fuse

Fu PS: 1 A
delayed fuse

TM2 DDO 16TK

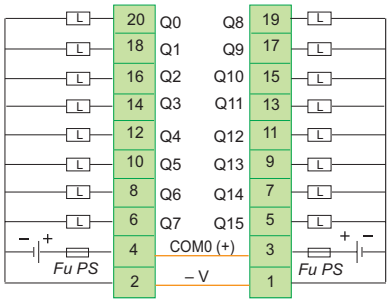

Fu PS: 2 A
delayed fuse

TM2 DDO 32UK

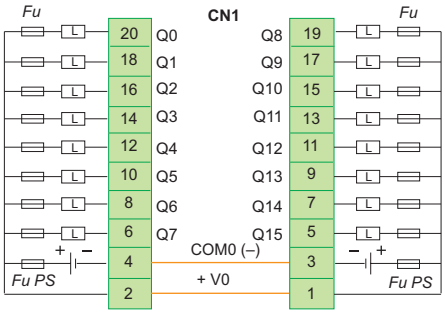

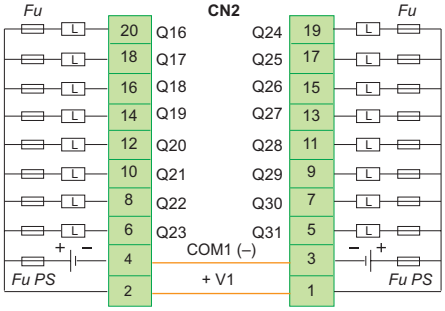

Fu:
0.1 A fast-blow fuse

Fu PS: 1 A
delayed fuse

TM2 DDO 32TK

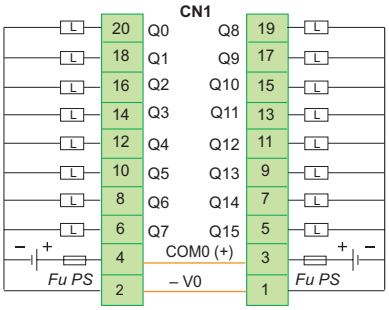

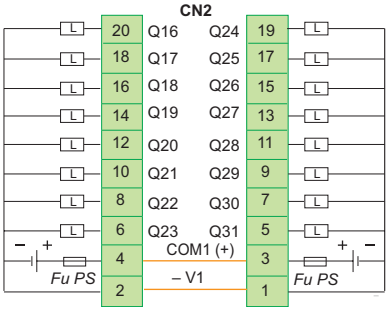

Fu PS: 2 A
delayed fuse

COM● (-), COM● (+), + V● or - V● internal links.

Connections (continued)

Relay output modules

TM2 DRA 8RT

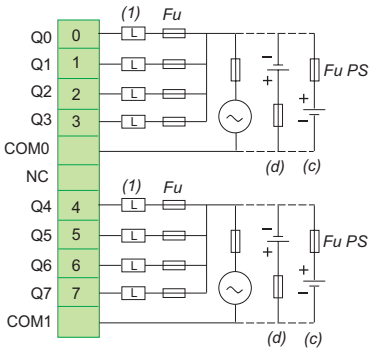

Fu PS: 8 A delayed fuse

TM2 DRA 16RT

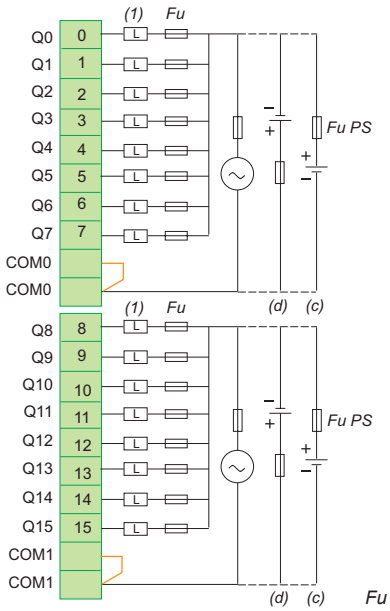

Fu PS: 8 A delayed fuse

(1) L inductive load: must be equipped with a protection device such as an RC peak limiter or flywheel diode.
(c) Sink output (negative logic).
(d) Source output (positive logic).
COM● internal links.

Input/output mixed modules

TM2 DMM 8DRT

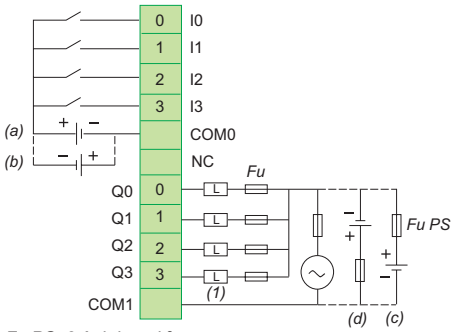

Fu PS: 8 A delayed fuse

TM2 DMM 24DRF

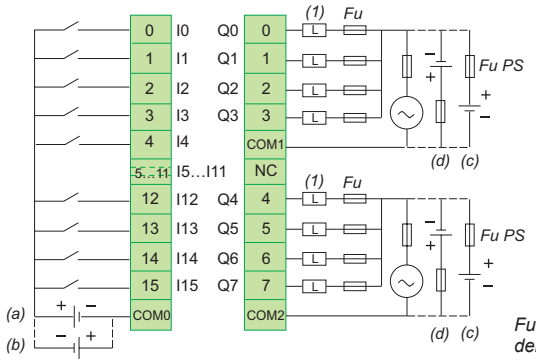

Fu PS: 8 A delayed fuse

(1) L inductive load: must be equipped with a protection device such as an RC peak limiter or flywheel diode.
(a) Sink input (positive logic).
(b) Source input (negative logic).
(c) Sink output (negative logic).
(d) Source output (positive logic).

Temperature derating curves of mixed input/output modules (continued)

TM2 DMM 24DRF

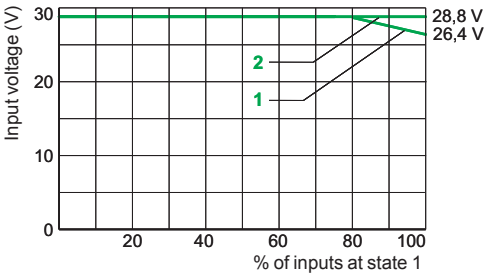

1 Input voltage at 45 °C
2 Input voltage at 55 °C

Modicon M238 logic controller
Analogue I/O extension modules

Applications	**Type of extension modules**	**Analogue inputs**			
	Compatibility	- Modicon M238 logic base controllers - Twido compact and modular controllers - Magelis HMI controller - Modicon OTB I/O distributed Interfaces			




Type		2 inputs		4 inputs	8 inputs
Nature		Voltage/current	Thermocouple inputs	Voltage/current Temperature probe	Voltage/current
Connection		Removable screw terminal block			
Inputs	Range	0...10 V 4...20 mA (non differential)	Thermocouple type J, K and T (differential)	0...10 V ● 0...20 mA ● Temperature probe 2, 3 or 4-wire Pt100/1000 ■ : - 200…600 °C Ni 100/1000 ■ : - 50…150 °C (non differential)	0...10 V 0...20 mA (non differential)
	Resolution	12 bits (4096 points)	12 bits (4096 points)	12 bits (4096 points)	10 bits (1024 points)
	Acquisition period	10 ms per channel + 1 controller cycle time	200 ms per channel + 1 controller cycle time	160 ms per channel ● 320 ms per channel ■ + 1 controller cycle time	160 ms per channel + 1 controller cycle time
Outputs	Range				
	Resolution				
	Transfer time				
External suplly	Nominal voltage	⎓ 24 V			
	Limit values	⎓ 20.4…28.8 V			
Isolation	Between channels	Non isolated			
	Between channels and sensor supply	∿ 500 V rms		Non isolated	
	Between channels and internal logic	∿ 500 V rms	∿ 2500 V rms	∿ 2500 V rms	
Analogue I/O module type		**TM2 AMI 2HT**	**TM2 AMI 2LT**	**TM2 AMI 4LT**	**TM2 AMI 8HT**
Pages		38			

Analogue inputs (continued)			**Analogue outputs**		**Analogue I/O**		
- Modicon M238 logic base controllers - Twido compact and modular controllers - Magelis HMI controller - Modicon OTB I/O distributed Interfaces							
		 (2)					
8 inputs			1 output	2 outputs	2 inputs/1 output		4 inputs/2 outputs
Temperature probe inputs			Voltage/current	Voltage	Voltage/current	Thermocouple/ temperature probe inputs Voltage/current output	Voltage/current
Removable screw terminal block		Removable screw terminal block and RJ11 connectors	Removable screw terminal block				
NTC probe (non diffe-rential)	PTC probe ⚠ Threshold detection (high and low) (non dif.)	Temperature probe 2 or 3-wire Pt100: - 200…600 °C Pt1000 :- 50…200 °C) (non differential)			0...10 V 4...20 mA (non differential)	Thermocouple type J, K and T Temperature probe 2 or 3-wire Pt100: - 100…500 °C (non differential)	0...10 V 4...20 mA (non differential)
10 bits (1024 pts)	**1** < range **2** = range **4** > range	12 bits (4096 points)			12 bits or 11 bits + sign (4096 points)		12 bits (4096 points)
160 ms per channel + 1 controller cycle time		320 ms per channel (1280 ms maxi.) + 1 controller cycle time			10 ms per channel + 1 controller cycle time	50 ms per channel + 1 controller cycle time	64 ms per channel + 1 controller cycle time
			0...10 V 4...20 mA	± 10 V	0...10 V 4...20 mA		
			12 bits (4096 points)	11 bits (2048 points) + sign	12 bits (4096 points)		
			10 ms + 1 controller cycle time	2 ms + 1 controller cycle time	20 ms + 1 controller cycle time		
⎓ 24 V			⎓ 24 V				
⎓ 20.4…28.8 V		⎓ 19.2…30 V	⎓ 19.2…30 V				
Non isolated							
Non isolated		∿ 500 V rms	∿ 500 V rms	Non isolated	∿ 500 V rms		∿ 800 V rms
∿ 2500 V rms			∿ 500 V rms	∿ 2500 V rms	∿ 500 V rms		∿ 1500 V rms
TM2 ARI 8HT	**TM2 ARI 8LT** *(1)* **TM2 ARI 8LRJ** *(2)*		**TM2 AMO 1HT**	**TM2 AVO 2HT**	**TM2 AMM 3HT**	**TM2 ALM 3LT**	**TM2 AMM 6HT**
38							

(1) Connection by a removable screw terminal block.
(2) Connection by a RJ11 connector.

Modicon M238 logic controller

Analog I/O extension modules

Presentation

Analog I/O extension modules enable the acquisition of various analog values encountered in industrial applications.
Analog output modules are used to control the preactuators in devices such as variable speed drives, valves and applications that require process control. The output current or voltage is proportional to the numerical value defined by the user program. When the controller stops, the outputs can be configured with fallback (reset to the lowest scale value or hold the last value received). This function, when set to 'hold', is useful when debugging the application or when a fault occurs, to ensure that the process being controlled is not disturbed.

The following 10 analog I/O modules are available:
- One module with 2 inputs: 0…10 V, 4…20 mA
- One module with 2 inputs for type J, K and T thermocouples
- One module with 4 inputs: 0…10 V, 0…20 mA, Pt 100/1000 range - 200…600°C, Ni100/1000 range - 50...150°C
- Two modules with 8 temperature probe inputs: Pt100 range - 200…600°C and Pt1000 range - 50…200°C (with RJ11 connectors or removable screw terminal block)
- One module with 8 inputs: 0…10 V, 0…20 mA
- One module with 8 inputs: PTC/NTC *(1)*
- One module with 1 output: 0…10 V, 4…20 mA
- One module with 2 outputs: ± 10 V
- One mixed module with 2 inputs (0…10 V, 4…20 mA) and 1 output (0…10 V, 4…20 mA)
- One mixed module with 2 thermocouple (type J, K and T) or temperature probe inputs and 1 output 0…10 V, 4…20 mA
- One mixed module with 4 inputs (0…10 V, 4…20 mA) and 2 outputs (0…10 V, 4…20 mA)

Analog extension modules offer a resolution of 10 bits, 11 bits + sign and 12 bits, with connection by removable screw terminal block. An external 24 V ⎓ power supply is required for each analog module.

Discrete I/O extension modules and analog I/O modules are connected to the different base controllers according to the following rules:
- Modicon M238 24 I/O compact base controllers, **TM238 L●●●●●●**: 7 modules max.
- Twido 24 I/O compact base controllers, **TWD LC●A 24DRF**: 4 modules max.
- Twido 40 I/O compact base controllers, **TWD LC●● 40DRF**: 7 modules max.
- Twido 20 I/O modular base controllers, **TWD LMDA 20D●K**: 4 modules max.
- Twido 20 I/O and 40 I/O modular base controllers, **TWD LMDA 20DRT/40D●K**: 7 modules max.
- Magelis HMI Controller, **XBT GC1100●**: 2 modules max.
- Magelis HMI Controller, **XBT GC2●●0●**: 3 modules max.
- Modicon OTB Interface 20 I/O, **OTB 1●0 DM9LP**: 7 modules max.

All analog I/O modules are electrically isolated with the use of a photocoupler between the internal electronic circuit and the input/output channels.

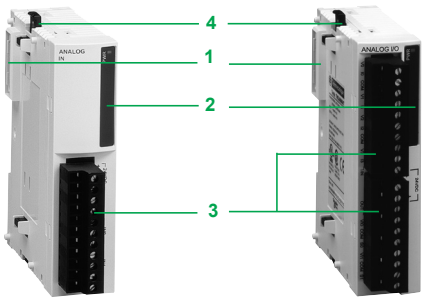

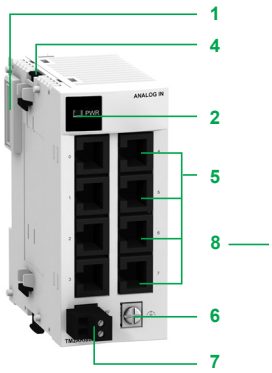

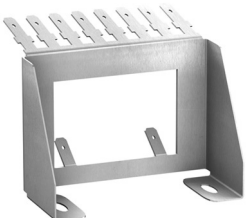

Description

Analog I/O modules comprise:
1. An extension connector for electrical connection to the adjacent module *(2)*
2. A PWR display block
3. One (or two, depending on model) removable screw terminal block(s) for connecting the 24 V ⎓ external power supply, the sensors and the preactuators
4. A latching mechanism for attachment to the adjacent module

For modules with 8 temperature probe inputs:
5. 8 RJ11 connectors. A version of this module is available with 2 removable screw terminal blocks (2 x 13 terminals)
6. A screw terminal for connecting the functional ground (FG)
7. A removable screw terminal block for connecting the 24 V ⎓ power supply

The **TM2 XMTGB** ground connection plate **8** simplifies connection of the analog sensor and actuator cable shielding. This shielding must be connected to the device's functional ground (FG).
These modules are mounted on a symmetrical ⊔ rail. Mounting kit **TWD XMT 5** (supplied in lots of 5) can be used for plate or panel mounting.

(1) With PTC probe, threshold detection inputs (high and low).
(2) A connector on the right-hand side panel ensures continuity of the electrical link with the adjacent I/O module.

Characteristics of 2 and 4-channel analog input modules

Module type			TM2 AMI 2HT		TM2 AMI 2LT	TM2 AMI 4LT		
Number of channels			2 high-level inputs		2 low-level inputs	4 inputs		
Range			Voltage	Current	Thermocouple	Voltage	Current	Temperature probe
			0…10 V	4…20 mA	Type J: - 200…760° Type K: - 270…1370°C Type T: - 270…400°C No isolation between the input channels	0…10 V	0…20 mA	Pt100/1000: - 200… 600°C Ni100/1000: - 50…150°C
Type			Non-differential		Differential	Non-differential		
Resolution			12 bits		12 bits	12 bits		
LSB value			2.5 mV	4.8 µA	Type J: 0.3°C Type K: 0.325°C Type T:0.1°C	2.5 mV	4.8 µA	0.15 ° K
Connection			Removable screw terminal block					
Sensor cabling			Shielded cable (shielding to be connected to the TM2 XMTGB ground connection plate)					
Permissible continuous overload			13 V ⎓	40 mA	± 7.5 V ⎓	40 mA	13 V	–
Input impedance			1 MΩ min.	10 Ω	1 MΩ min.	10 KΩ	470 Ω	> 10 kΩ
Maximum sampling duration		ms	10		200	160		
Acquisition period		ms	10 per channel + 1 controller cycle time		200 per channel + 1 controller cycle time	160 per channel + 1 controller cycle time		320 per channel
Measuring precision	Max. error at 25°C	% FS	± 0.2		0.2 ± 5°C *(1)*	± 0.2		± 0.4
	Temperature coefficient	% FS/°C	± 0.006		± 0.006	± 0.009		± 0.004
	Repeat accuracy after stabilization time	% FS	± 0.5		± 0.5	± 0.1		
	Nonlinearity	% FS	± 0.2		± 0.2	± 0.02		
	Total error	% FS	± 1		± 1	± 0.5		
Crosstalk			2 low significance bits max.			1 low significance bit max.		
Dielectric strength	Between channels		Non-isolated			Non-isolated		
	Between channels and external supply	V rms	500 ∿			Non-isolated		
	Between channels and internal logic	V rms	500 ∿		2500 ∿	2500 ∿		
Isolation			Photocoupler between the input and the internal circuit					
External supply		V	Nominal voltage 24 ⎓; Limit values: 20.4…28.8 ⎓ (ripple included)					
Consumption	Internal 5 V ⎓ supply	mA	50		60	50		
	External 24 V ⎓ supply	mA	40		30	60		

Characteristics of 8-channel analog input modules

Module type			TM2 ARI 8HT	TM2 AMI 8HT		TM2 ARI 8LRJ/8LT
Number of channels			8 inputs	8 inputs		8 inputs (2 groups of 4 inputs)
Range			Temperature	Current	Voltage	Temperature probe
			NTC probe, PTC probe, 100 Ω < R < 10 kΩ	0…20 mA	0…10 V	Pt100: - 200…600°C Pt1000: - 50…200°C
Type			Non-differential			
Resolution			10 bits with NTC *(2)*	10 bits		12 bits
LSB value			–	19.5 µA	9.7 mV	0.2°C (Pt 100), 0.06°C (Pt 1000)
Connection	Sensors		Removable screw terminal block			TM2 ARI 8LRJ, RJ11 connectors TM2 ARI 8LT, removable screw terminal blocks
	External supply		Removable screw terminal block			Removable screw terminal block
Sensor cabling			Shielded cable (shielding to be connected to the TM2 XMTGB ground connection plate)			
Permissible continuous overload			–	40 mA	13 V	–
Input impedance			>1 MΩ	470 Ω	> 10 kΩ	> 10 kΩ
Maximum sampling duration		ms	160			
Acquisition period		ms	160 per channel + 1 controller cycle time			320 per group of channels (channels 0…3 and channels 4…7) or 1280 max. + 1 controller cycle time
Measuring precision	Max. error at 25°C	% FS	± 0.2			± 0.5 (Pt 100), ± 0.3 (Pt 1000)
	Temperature coefficient	% FS	± 0.01			± 0.01
	Repeat accuracy after stabilization time		± 0.4% FS			± 0.1°C
	Nonlinearity	% FS	± 0.002			–
	Total error		± 1% FS			4°C (Pt 100), 1°C (Pt 1000)
Crosstalk			1 low significance bit max.			–
Dielectric strength	Between channels		Non-isolated			Non-isolated
	Between channels and external supply	V rms	Non-isolated			500 ∿
	Between channels and internal logic	V rms	2500 ∿			2500 ∿
Isolation			Photocoupler between the input and the internal circuit			
External supply	Nominal voltage	V	24 ⎓			24 ⎓
	Limit values	V	20.4…28.8 ⎓ (ripple included)			19.2…30 ⎓ (ripple included)
Consumption	Internal 5 V ⎓ supply	mA	60			90
	External 24 V ⎓ supply	mA	45			140 max.

(1) ± 5°C: Precision of cold junction compensation
*(2) With PTC probe, 2 threshold detection (**1**: value ⩽ low threshold, **2**: value included between low and high threshold, **4**: value ⩾ high threshold)*

Characteristics of 3 and 6-channel analog input/output modules

Analog inputs

Module type			TM2 AMM 3HT		TM2 AMM 6HT		TM2 ALM 3LT	
Number of channels			2 high-level inputs		4 high-level inputs		2 low-level inputs	
			Voltage	Current	Voltage	Current	Thermocouple	Temperature probe
Range			0…10 V	4…20 mA	0…10 V	4…20 mA	Type: - J: 0…1200°C - K: 0…1300°C - T: 0…400°C Non-isolation between input channels	3-wire Pt probe: - 100…500°C
Type			Non-differential		Non-differential		Non-differential	
Resolution			12 bits					
LSB value			2.5 mV	4.8 µA	2.5 mV	4 µA	0.1°C	0.15°C
Permissible continuous overload			13 V ⎓	40 mA	13 V ⎓	40 mA	–	
Input impedance			1 MΩ min.	10 Ω min.	1 MΩ min.	250 Ω max.	1 MΩ min.	
Maximum sampling duration		ms	10		16		60	20
Acquisition period		ms	60 + 1 controller cycle time		16 per channel, configurable software + 1 controller cycle time		60 + 1 controller cycle time	80 + 1 controller cycle time
Measuring precision	Max. error at 25°C	% FS	± 0.2		± 0.5		0.2 ± 4°C max. *(1)*	± 0.2
	Temperature coefficient	% FS/°C	± 0.006		± 0.015		± 0.006	
	Repeat accuracy after stabilization time	% FS	± 0.5		± 0.5		± 0.5	
	Nonlinearity	% FS	± 0.2		± 0.4		± 0.2	
	Total error	% FS	± 1		± 1		± 1	
Crosstalk			2 low significance bits max.					
Isolation			Photocoupler between the inputs and the internal circuit					

Analog outputs

Module type			TM2 AMM 3HT		TM2 AMM 6HT		TM2 ALM 3LT	
Number of channels			1 output		2 outputs		1 output	
			Voltage	Current	Voltage	Current	Voltage	Current
Range			0…10 V	4…20 mA	0…10 V	4…20 mA	0…10 V	4…20 mA
Resolution			12 bits					
LSB value			2.5 mV	4.8 µA	2.5 mV	4 µA	2.5 mV	4.8 µA
Load	Type		Resistive					
	Impedance	Ω	2000 min.	300 max.	2000 min.	300 max.	2000 min.	300 max.
Stabilization time		ms	20					
Recovery time		ms	20 + 1 controller cycle time					
External supply		V	Nominal voltage: 24 ⎓; Limit values: 20.4…28.8 ⎓ (ripple included)					
Measuring precision	Max. error at 25°C	% FS	± 0.2		± 0.9		± 0.2	
	Temperature coefficient	% FS/°C	± 0.015		± 0.02		± 0.015	
	Repeat accuracy after stabilization time	% FS	± 0.5		± 1		± 0.5	
	Output error	% FS	± 1					
	Nonlinearity	% FS	± 0.2		± 0.5		± 0.2	
	Output ripple		1 low significance bit max.					
	Total error	% FS	± 1		± 1.5		± 1	
Isolation			Photocoupler between the inputs and the internal circuit					

Analog I/O common

Module type			TM2 AMM 3HT	TM2 AMM 6HT	TM2 ALM 3LT
Connection			Removable screw terminal block		
Sensor and preactuator cabling			Shielded cable (shielding to be connected to the TM2 XMTGB ground connection plate)		
Dielectric strength	Between input channels		Non-isolated		
	Between input and output channels	V rms	500 ∼	800 ∼	500 ∼
	Between channels and external supply	V rms	500 ∼	800 ∼	500 ∼
	Between channels and internal logic	V rms	500 ∼	1500 ∼	500 ∼
External supply	Nominal voltage	V	24 ⎓		
	Limit values		19.2…30 ⎓ (ripple included)		
Module consumption	Internal 5 V ⎓ supply	mA	50	60	50
	External 24 V ⎓ supply	mA	50	80	50

(1) ± 4°C: Precision of cold junction compensation

Characteristics of 1 and 2-channel analog output modules

Module type			TM2 AMO 1HT		TM2 AVO 2HT
Number of channels			1 output		2 outputs
			Voltage	Current	Voltage
Range			0…10 V	4…20 mA	±10 V
Resolution			12 bits		11 bits + sign
LSB value			2.5 mV	4.8 µA	± 9.8 mV
Connection			Removable screw terminal block		
Cabling			Twisted shield cable, shield to connect to the ground connection plate mounting TM2 XMTGB		
Load	Type		Resistive		
	Impedance	Ω	2000 min.	300 max.	3000 min.
Stabilization time		**ms**	10		2
Recovery time		**ms**	10 + 1 controller cycle time		2 + 1 controller cycle time
Measuring precision	Max. error at 25°C	**% FS**	± 0.2		± 0.5
	Temperature coefficient	**% FS/°C**	± 0.015		± 0.01
	Repeat accuracy after stabilization time	**% FS**	± 0.5		± 0.1
	Nonlinearity	**% FS**	± 0.2		
	Output ripple		1 low significance bit max.		
	Total error	**% FS**	± 1		
Dielectric strength	Between channels		–		Non-isolated
	Between channel(s) and external supply	**V rms**	500 ∿		Non-isolated
	Between channel(s) and internal logic	**V rms**	500 ∿		2500 ∿
Isolation			Photocoupler between the outputs and the internal circuit		
External supply	Nominal voltage	**V**	24 ⎓		
	Limit values	**V**	19.2…30 ⎓ (ripple included)		
Module consumption	Internal 5 V ⎓ supply	**mA**	50		60
	External 24 V ⎓ supply	**mA**	40		60

Modicon M238 logic controller
Analog I/O extension modules

References

These analog I/O extension modules are mounted on symmetrical ⊥⊥ rails to the right of base controller below. The maximum number of I/O and/or analog modules which may be mounted depends on the type of base controller:

Base controller type	Twido compact TWD				Twido modular TWD			Modicon M238	Magelis HMI Controller		Modicon OTB Interface
	LC•A 10DRF	LC•A 16DRF	LC•A 24DRF	LC•• 40DRF	LMDA 20D•K	LMDA 20DRT	LMDA 40D•K	TM238 L•••••••	XBT GC 1100•	XBT GC 2••0•	OTB 1•0 DM9LP
Number of modules	0	0	4	7	4	7	7	7	2	3	7


TM2 AMI 2HT


TM2 AMI 2LT


TM2 ARI 8LRJ


TM2 ARI 8LT


TM2 ALM LT


TM2 AMM 6HT

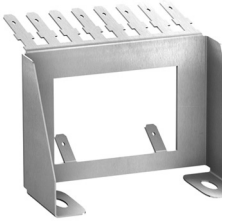
TM2 XMTGB


TM200 RSRCEMC

Analog input modules

Channel type	Input range	Output range	Resolution	Connection by	Reference	Weight kg
2 inputs	0…10 V 4…20 mA	–	12 bits	Removable screw terminal block (supplied)	**TM2 AMI 2HT**	0.085
	Thermocouple K, J, T	–	12 bits	Removable screw terminal block (supplied)	**TM2 AMI 2LT**	0.085
4 inputs	0…10 V 0…20 mA Temperature	–	12 bits	Removable screw terminal block (supplied)	**TM2 AMI 4LT**	0.085
8 inputs	0…10 V 0…20 mA	–	10 bits	Removable screw terminal block (supplied)	**TM2 AMI 8HT**	0.085
	Pt 100 Pt 1000	–	12 bits	RJ11 connector	**TM2 ARI 8LRJ**	0.190
				Removable screw terminal block (supplied)	**TM2 ARI 8LT**	0.190
	PTC/NTC	–	10 bits for NTC 2-threshold detection with PTC	Removable screw terminal block (supplied)	**TM2 ARI 8HT**	0.085

Analog output modules

1 output	–	0…10 V 4…20 mA	12 bits	Removable screw terminal block (supplied)	**TM2 AMO 1HT**	0.085
2 outputs	–	± 10 V	11 bits + sign	Removable screw terminal block (supplied)	**TM2 AVO 2HT**	0.085

Analog I/O modules

2 inputs and 1 output	0…10 V 4…20 mA	0…10 V 4…20 mA	12 bits	Removable screw terminal block (supplied)	**TM2 AMM 3HT**	0.085
	J, K, T thermocouple 3-wire Pt 100 temperature probe	0…10 V 4…20 mA	12 bits	Removable screw terminal block (supplied)	**TM2 ALM 3LT**	0.085
4 inputs and 2 outputs	0…10 V 4…20 mA	0…10 V 4…20 mA	12 bits	Removable screw terminal block (supplied)	**TM2 AMM 6HT**	0.085

Separate components

Description	Description	Reference	Weight kg
Ground connection plate	Plate equipped with male Faston connector for connecting cable shielding (via Faston clamp 6.35 mm, not supplied) and functional grounds (FG)	**TM2 XMTGB**	0.045
Shielding connection clamps	Attach and ground the shielding of the cables Sold in lots of 25 (20 for cable Ø 4.8 mm and 5 for cable Ø 7.9 mm)	**TM200 RSRCEMC**	–
Mounting kit	For plate or panel mounting of the analog modules. Sold in lots of 5	**TWD XMT 5**	0.065

Dimensions

Analog I/O modules

TM2	a	b	c
AMI ●●T	23.5	70	14.6
ARI 8HT	23.5	70	14.6
ARI 8LT	39.1	70	14.6
ARI 8LRJ	39.1	70	14.6 *(1)*
AMO ●HT	23.5	70	14.6
A●M ●●T	23.5	70	14.6

(1) Included removable screw terminal block for connecting 24 V ⎓ power supply

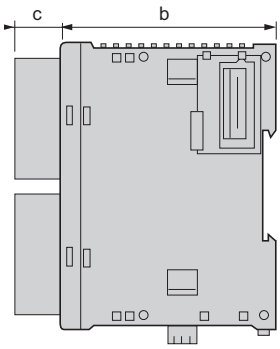

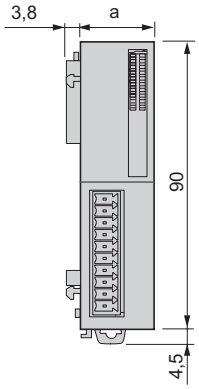

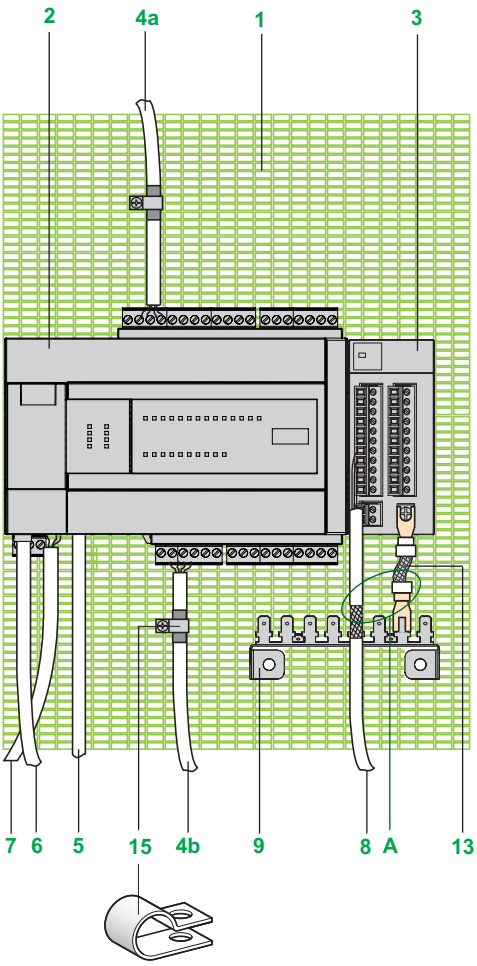

Detail A: *Ground connection plate TM2 XMTGB*

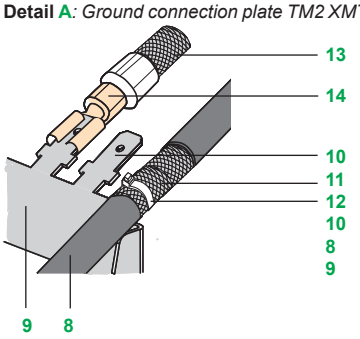

Note: *These shielding connections do not remove the need to connect the PE protective conductors (green-yellow) to the appropriate terminals on each unit or product.*

Connections for ensuring conformity to EMC standards

Principle

In order to protect against external interference, cables and cordsets carrying the signals below must be shielded:
■ Extension modules:
□ Sensors and actuators connected to **TM2 AMI/ARI** and **TM2 A●O/A●M** analog I/O
□ Sensors connected to **TM200 HSC206D●** high-speed counter inputs
■ Modicon M238 controller base:
□ Incremental encoders and sensors connected to the high-speed inputs and used in counter mode (> 100 Hz)
□ Actuators with PTO/PWM signals connected to the high-speed outputs
□ Serial links and CANopen buses

The use of shielded cables requires compliance with the following wiring rules:
■ Shielding earthed at both ends of the cables. Metal conduit or ducting can be used for part of the shielding length, provided there is no break in the continuity of the ground connections.
■ Wherever possible, keep cables carrying signals of different categories separate··

Installation diagram for Modicon M238 controller

1 Metal plate connected to the device's protective earth (PE)
2 Modicon M238 logic controller
3 Analog or high-speed counter extension modules
4 Shielded cables for connecting the high-speed inputs **4a** and high-speed outputs **4b** to the actuators with PTO/PWM signals
5 Shielded cordset for connecting serial links SL1 and SL2. **TCS MCN 3M4●●●2** cordsets include the earthing lug.
6 Shielded cable for connecting the CANopen bus. The shielding is connected to terminal 3 on the terminal block (see page 10).
7 Unshielded power supply wires or cable; see connection of the ⏚ terminal on page 40.
8 Shielded cable for connecting the extension module sensors/actuators (analog or high-speed counter)
9 Earth connection plate **TM2 XMTGB** for attaching and earthing the shielding of the cables numbered **8** in the diagram (see detail **A**)

Connecting the shielding of cables 4a and 4b

Shielding of cables **4a** and **4b** (connection of sensors/actuators to the base) via shielding connection clamp **15** *(1)*:
□ Attach and ground the shielding of the cables **4** as close as possible to the controller base.
□ Strip the shielding (at the clamp **15**).
□ Attach the cable to the metal support **1** by tightening the clamp onto the stripped part of the shielding.
The shielding must be clamped tightly enough to the metal support to ensure good contact.

Connecting the shielding of cables 8

The shielding for cables **8** (connection of the extension modules' sensors/actuators) must be attached to the ground connection plate **TM2 XMTGB** (see detail **A** opposite)

Connecting the functional ground terminals

The functional ground terminals (FG) of the:
□ 24 V ⎓ power supply of the Modicon M238 controller base
□ Analog I/O or high-speed counter extension modules (see detail **A**)

Installing the ground connection plate TM2 XMTGB

□ **8**, **9**, **10**, **11** and **12**: The shielding on cable **8** is stripped at the male Faston connector **10** for a length of 15 mm **11**, then tightly clamped on it using the Rilsan clamp **12** (width 2.5…3 mm).
□ **13** and **14**: Functional ground terminal (FG). Each earth terminal on the extension modules (analog and counter) must be connected to the **TM2 XMTGB** plate **9** via an earth braid **13** *(2)* (width **W** 2…5 mm, thickness **W**/5) and using a 6.35 mm Faston connector **14** .

*(1) The shielding of cables **4a** and **4 b** can be attached to plate **TM2 XMTGB**, in the same way as cable **8**.*
*(2) Earth braid supplied with **TM2 ARI 8LT/LRJ** analog modules and **TM200 HSC206D●** counter module.*

Connections

Analog input modules

TM2 AMI 2HT

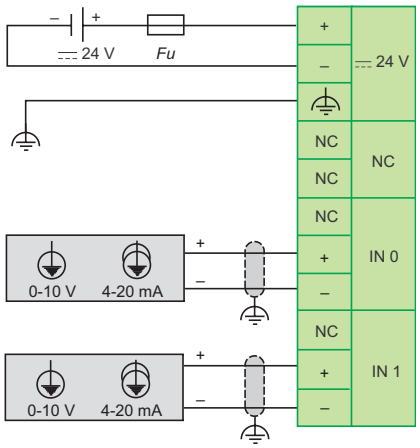

⚠ Do not connect any wires to an unused channel.

TM2 AMI 2LT

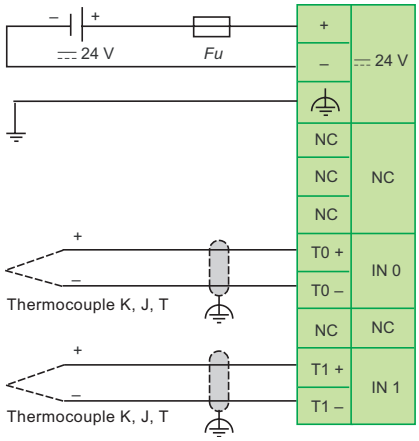

TM2 AMI 4LT

Voltage/current configuration

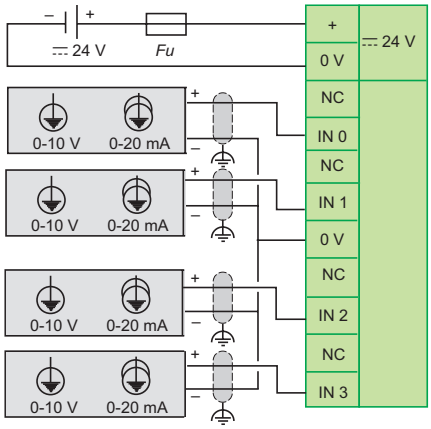

PT100/PT1000 temperature probe, Ni100/Ni1000 configuration

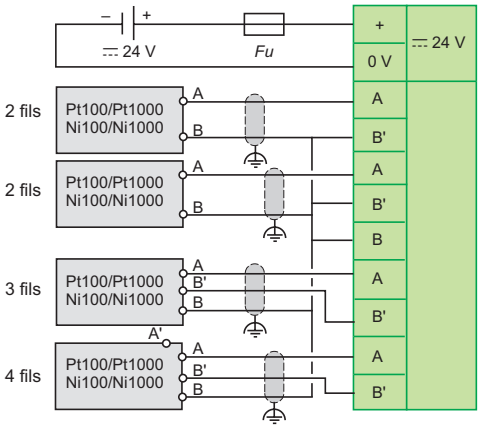

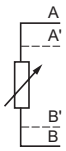

Probe details
2/3/4-wire
- 2-wire (A,B)
- 3-wire (A,B, B')
- 4-wire (A, A', B, B')

TM2 AMI 8HT

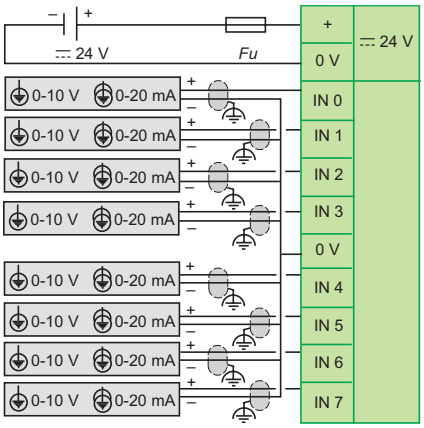

TM2 ARI 8HT

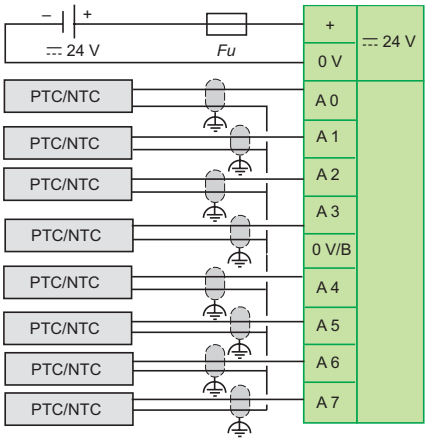

⚠ With PTC probe, threshold detection input (high and low)

⚠ Do not connect any wires to an unused channel.

Fu: 2 A delayed fuse

Connections (continued)

Analog input modules (continued)

TM2 ARI 8LT

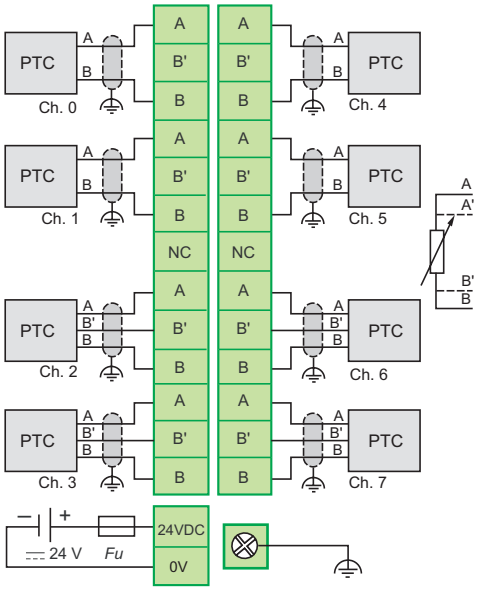

TM2 ARI 8LRJ

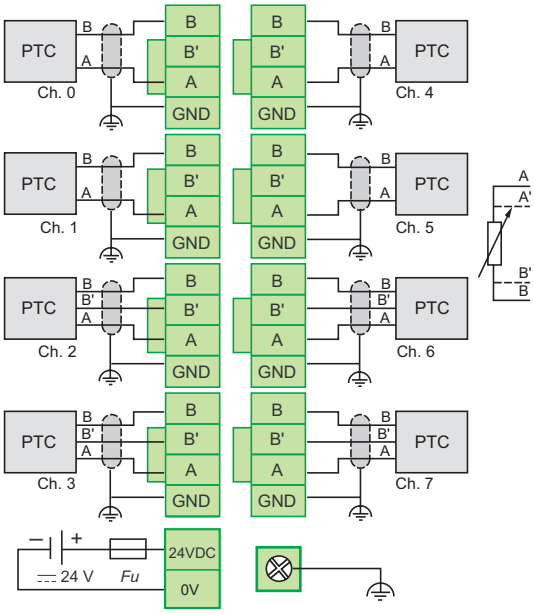

Each channel of the **TM2 ARI 8LT/8LRJ** module can be used as either 2-wire or 3-wire.

Analog output modules

TM2 AMO 1HT

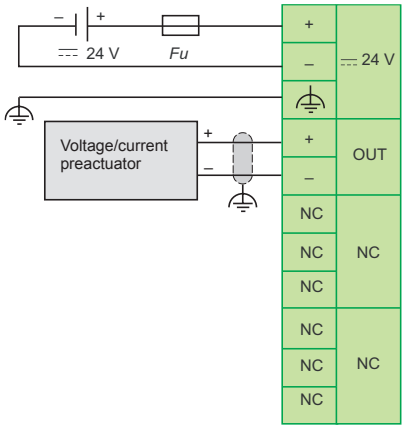

TM2 AVO 2HT

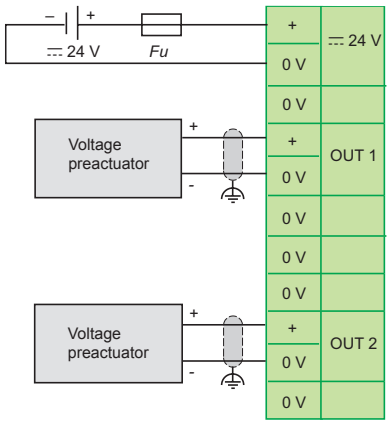

⚠ Do not connect any wires to an unused channel.

Fu: 2 A delayed fuse

Connections (continued)

Mixed input/output modules

TM2 AMM 6HT

Voltage configuration

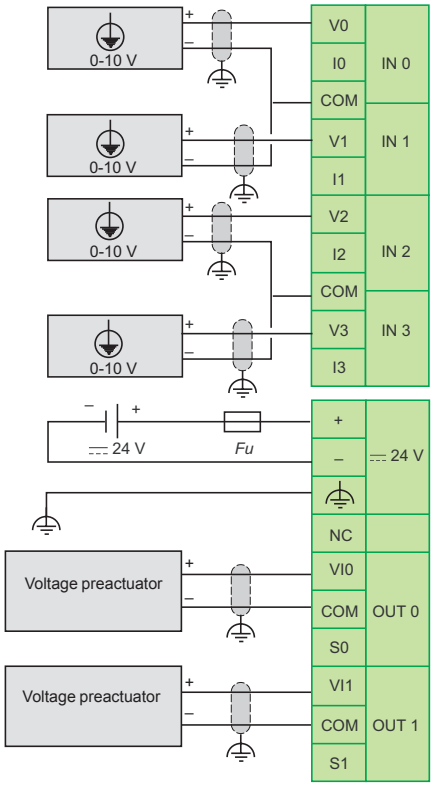

Current configuration

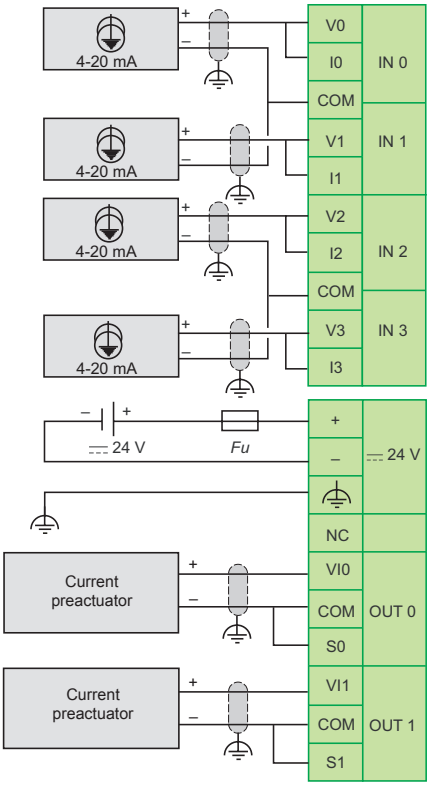

⚠ Do not connect any wires to an unused channel.

TM2 AMM 3HT

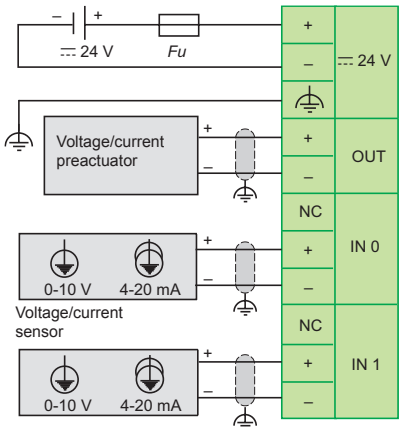

TM2 ALM 3LT

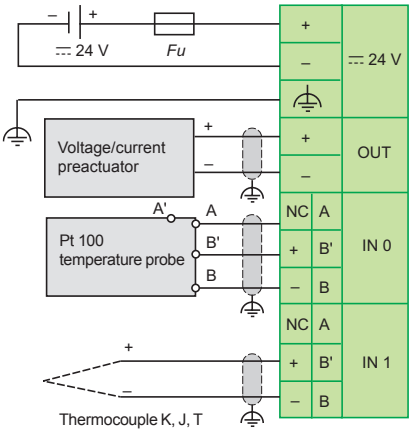

- For a Pt 100 3-wire temperature probe (RTD), connect the three wires to terminals A, B' and B (channels IN0 and IN1).
- For a Pt 100 2-wire temperature probe (RTD), connect the two wires to terminals A and B' and make a bridge between B' and B (channels IN0 and IN1).
- For a thermocouple, connect the two wires to terminals B' and B (channels IN0 and/or IN1).

⚠ Do not connect any wires to an unused channel.

Fu: 2 A delayed fuse

Modicon M238 logic controller

TM200 HSC 206D● counter modules

Presentation

TM200 HSC 206DT/DF counter modules for the Modicon M238 logic controller are used to count the pulses generated by a sensor or to process the signals from an incremental encoder.
The two modules, both with two 60 KHz counter channels, differ in the way they are connected:
- Removable screw terminal block (2 x 16 contacts): **TM200 HSC 206DT**
- Removable spring terminals **TM200 HSC 206DF**

Counter modules	No. of channels	Maximum frequency	Integrated functions	Physical I/O per channel	
				Inputs	Outputs
TM200 HSC 206DT **TM200 HSC 206DF** (3 modules max. per TM238 base)	2	60 KHz	Upcounting Downcounting Period meter Frequency meter Frequency generator Axis following with encoder	6	2

The sensors used on each channel can be:
- 2-wire 24 V proximity sensors,
- 3-wire PNP 24 V proximity sensors,
- Limit switches (N/O or N/C contact),
- 15/30 V output signal incremental encoders and source outputs (positive logic).

TM200 HSC 206D● counter modules meet the requirements of such applications as:
- Alarm generation on empty unwinder status using the ratio,
- Sorting small parts using the period meter,
- Single electronic cam using the dynamic setting thresholds,
- Speed control using the period meter,
- Grouping/ungrouping for packaging machines,
- Event counting,
- Flow or speed measurement.

TM200 HSC 206D● counter modules are considered to be extension modules and as such are connected to the Modicon 238 base by stacking them on a ⊥⊥ rail starting at the right-hand side panel of the base (7 extension modules are permitted in total, a maxiumum of 3 of which can be **TM200 HSC 206D●** counter modules).
The function parameters are set by configuration using SoMachine software.

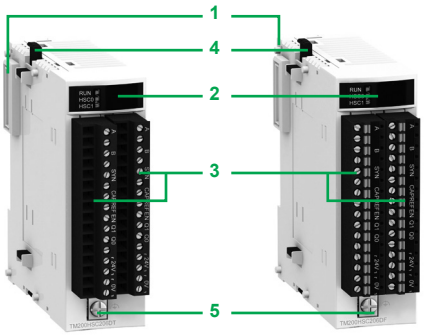

Description

TM200 HSC 206D● 60 KHz counter modules comprise:

1 An extension connector for linking with the adjacent module *(1)*.
2 A channel and module diagnostics display block.
3 2 removable screw or spring terminal blocks marked TB0 and TB1 for connecting the sensors and preactuators.
4 A mechanical device for locking to the adjacent module.
5 A screw terminal for the functional ground (FG) connection.

The **TM2 XMTGB** ground connection plate **6** simplifies connection of the sensor and encoder cable shielding. This shielding must be connected to the device's functional ground.
These modules are mounted as standard on a symmetrical ⊥ rail. The **TWD XMT 5** mounting kit (supplied in lots of 5) can be used for plate or panel mounting.

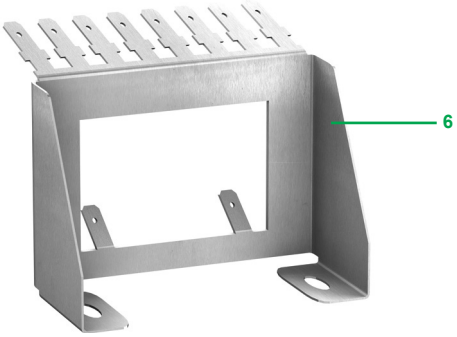

(1) A connector on the right-hand side panel ensures continuity of the link with the adjacent I/O module.

Operation

Block diagram of a TM200 HSC 206DT/DF module counter channel

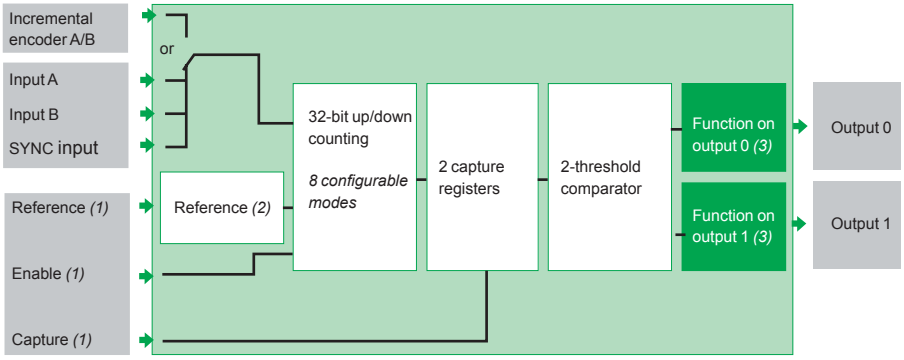

(1) Optional inputs.
(2) Reference: 4 operating modes for "IN_SYNC" SYNC and "IN_REF" Reference inputs.
(3) Function on outputs: 11 possible types of behaviour.

Functional characteristics of TM200 HSC 206DT/DF modules

8 configurable modes	Frequency meter	This mode measures a frequency, speed, data rate or an event stream. As standard, this mode measures the frequency received on the IN A input. This frequency is always expressed in Hz (number of pulses/second), with a precision of 1 Hz. The maximum frequency on the IN A input is 60 kHz. The maximum cyclic ratio at 60 kHz is 60%.
	Event counting	This mode is used to determine the number of events received. In this mode, the counter calculates the number of pulses applied to the IN_A input at time intervals defined by the user. The module counts the pulses applied to the IN_A input each time the pulse for this input lasts longer than 5 µs (without anti-bounce filter).
	Period measurement	This mode is used to: ■ Determine the duration of an event ■ Determine the time between 2 events ■ Time and measure the execution time of a process It measures the time elapsed during an event or between 2 events (IN_A input) according to a selectable time base of 1 µs, 100 µs or 1 ms. The IN_SYNC input can be used to enable or stop a measurement. The module can carry out a maximum of 1 measurement every 5 ms. The shortest measurable pulse is 100 µs, even if the unit defined by the user is 1 µs. The maximum measurable duration is 4,294,967,295 units (unit to be defined).
	Ratio counting	Ratio counting mode only uses the IN_A and IN_B inputs. There are 2 possible modes: ■ Ratio 1: Used to divide 2 frequencies. This is intended for applications such as flowmeters, mixers, etc. ■ Ratio 2: Used to subtract 2 frequencies. This is intended for the same applications, but for those requiring more precise regulation (more similar frequencies). Ratio 1 mode gives the results in thousandths for better accuracy (a display of 2000 corresponds to a value of 2) and ratio 2 mode gives the results in Hz. The maximum frequency that the module can measure on the IN_A and IN_B inputs is 60 kHz.
	Downcounting	This mode is used to list a group of operations. In this mode, activating the synchronization function starts the counter which, starting from a user-defined preset value, decreases with each pulse applied to the IN_A input, until it reaches 0. This downcounting is made possible when the enable function has been activated. The counting register is thus updated at 1 ms intervals. One basic use of this mode is to signal, using an output, the end of a group of operations (when the counter reaches 0). The shortest pulse applied to the IN_SYNC input is 100 µs. The maximum frequency applied to the IN_SYNC input is 1 pulse every 5 ms. The maximum user-defined preset value is 4,294,967,295. The maximum count value is 4,294,967,295 units.
	Loop (modulo) counting	This mode is used in packaging and labelling applications where actions are repeated on sets of moving objects. ■ In upcounting, the counter increases until it reaches the user-defined “modulo - 1” value. On the next pulse, the counter is reset to 0 and counting restarts. ■ In downcounting, the counter decreases until it reaches 0. On the next pulse, the counter is reset to the user-defined “modulo - 1” value. Downcounting can then restart. The maximum frequency applied to the IN_A and IN_B inputs is 60 kHz. The maximum frequency of the modulo event is 1 event every 5 ms. The maximum modulo value is 4,294,967,296 (possible by declaring 0 in the modulo setting value).
	32-bit counter counting	This mode is mainly used in axis following. The maximum frequency applied simultaneously to the IN_A and IN_B inputs is 60 kHz. The maximum frequency of the referencing event is 1 event every 5 ms. The counter value is between - 2,147,483,648 and + 2,147,483,647.

Environnement

Module			TM200 HSC 206DT	TM200 HSC 206DF
Certifications			CE, UL, CSA, ACA (C-Tick), GOST (pending)	
Temperature	Operation	**°C**	- 10…+ 55	
	Storage	**°C**	- 40…+ 70	
Relative humidity			95% max, without condensation	
Degree of	Protection		IP 20	
	Pollution		⩽ 2	
Altitude	Operation	**m**	0…2000	
	Storage	**m**	0…3000	
Imminity to mechanical constraints	Sinusoidal vibrations		5…150 Hz with 3,5 mm amplitude under 1 g Endurance : 10 cycles of 1 octave/min	
	Shocks		15 g / 11 ms; 3 shocks/direction/axis	

General characteristics

Module			TM200 HSC 206DT	TM200 HSC 206DF
Modularity			2 channels	
No. of counter modules per TM238 base			3	
No. of sensor inputs			6 per channel	
No. of actuator outputs			2 per channel	
Applications			Upcounting, downcounting, period measurement, frequency meter, frequency generator, axis following	
Configurable modes			8 modes	
Counter capacity			31 bits + sign	
Frequency on counter inputs		**kHz**	60 (cyclic ratio 60/40)	
Module cycle time		**ms**	1	
Encoder			15...30 V incremental encoder and source outputs (positive logic)	
Connection			1 screw terminal block (16 terminals) per channel	1 spring terminal block (16 contacts) per channel
Wiring			Shielded cable for the signals carrying the counter information > 1 kHz	
Insulation voltage	Between channels and internal logic	**V rms**	1500 for 1 min	
Maximum consumption	5 V ⎓ internal power supply	**mA**	100	
	24 V ⎓ internal power supply	**mA**	100	
	24 V ⎓ external power supply	**A**	2	

Input characteristics

Input type	High-speed inputs per channel			IN_A, IN_B and IN_SYNC
	Auxiliary inputs			IN_EN, IN_REF and IN_CAP
Inputs	No. per channel		**V**	6
	Voltage		**V**	24 ⎓
	IEC/EN 61131-2 conformity			Type 1
	Input logic			Positive (sink)
	At state 1	Voltage	**V**	15...30 ⎓
		Current	**mA**	5 up to 30 V ⎓
	At state 0	Voltage	**V**	< 5 ⎓
		Current	**mA**	< 0.5
	Current	At 11 V ⎓	**mA**	> 2

Output characteristics

Outputs	No. per channel		2, 24 V ⎓, 0.5 A
Voltages	Nominal	**V**	24 ⎓
	Limits	**V**	19.2...30 ⎓
Maximum load current	Per output	**A**	0.5
	Per module	**A**	2
Response time	On energization/de-energization	**µs**	< 200
Leakage current	At state 0	**mA**	⩽ 0.1
Voltage drop	At state 1	**V**	⩽ 3
current short-circuit	Per channel	**A**	< 1.5
Internal protection against overloads and short-circuits			Protection per output: 0.5 A…1.5 A max. trip current with automatic reset after disappearance of fault
Output logic			Positive (source)
Fallback state on fault	Default		Faulty channel set to 0
	By user configuration		Each channel individually held at its last value or set to the predefined value (0 or 1)
Maximum load	Capacitance	**µF**	50
	Inductance	**H** **H** **A** **Hz**	$L = 0.5/I^2 \times F$ where: - L: load inductance - I: load current - F: switching frequency

TM2 00HSC 206DT

TM2 00HSC 206DF

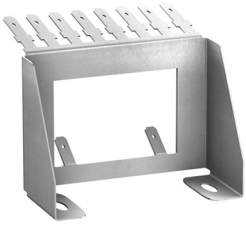

TM2 XMTGB

References

Counter modules (3 modules max. per TM238 base)

Description	No. of channels	Characteristics	Connection	Reference	Weight kg
Counter modules for: - 24 V ⎓ 2 and 3-wire sensors - 15/30 V ⎓ incremental encoders with source outputs (positive logic)	2	60 kHz counting	Screw terminals	**TM200 HSC 206DT**	0,150
			Spring terminals	**TM200 HSC 206DF**	0,150

Separate parts

Designation	Description	Reference	Weight kg
Ground connection plate	Support equipped with 10 male Faston connectors for connecting the cable shielding (via 6.35 mm connectors, not supplied) and the functional grounds (FG)	**TM2 XMTGB**	0.045
Mounting kit Sold in lots of 5	For plate or panel mounting of the analog modules	**TWD XMT 5**	0.065

Note: *The shielding of the cordsets carrying the counter signals must be connected to the metal plate or panel (earthed casing) which is connected to the device's protective ground (PE). See* **13** and detail **A** *on page 40.*

⚠ *Connecting the shielding does not remove the need to connect the functional ground screw terminal FG (item* **5** *on page 45) on the module to ground via the* **TM2 XMTGB** *ground connection plate.*

Dimensions

TM200 HSC206D● counter modules

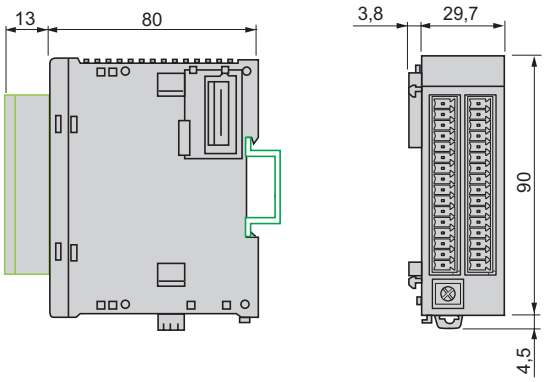

Connections

Pinout of the screw or spring terminals on the TM200 HSC 206D● module

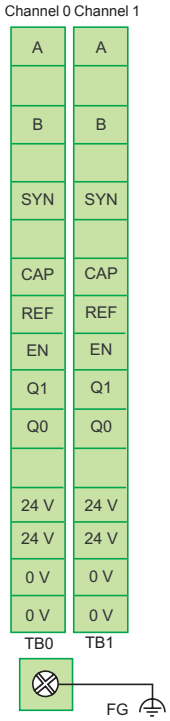

Marking terminal	Symbol	Description/channel
A	IN_A	Sensor input A
B	IN_B	Sensor input B
SYN	IN_SYNC	Synchronization input
CAP	IN_CAP	Capture input
REF	IN_REF	Referencing input
EN	IN_EN	Enable input
Q1	Q1	Counter channel Q1 output
Q0	Q0	Counter channel Q0 output
24 V	24V	+ 24 V ⎓ external power supply
0 V	0V	0 V ⎓ external power supply

Example of connecting incremental encoder, 2-wire sensors and actuators on channel 0 (TB0)

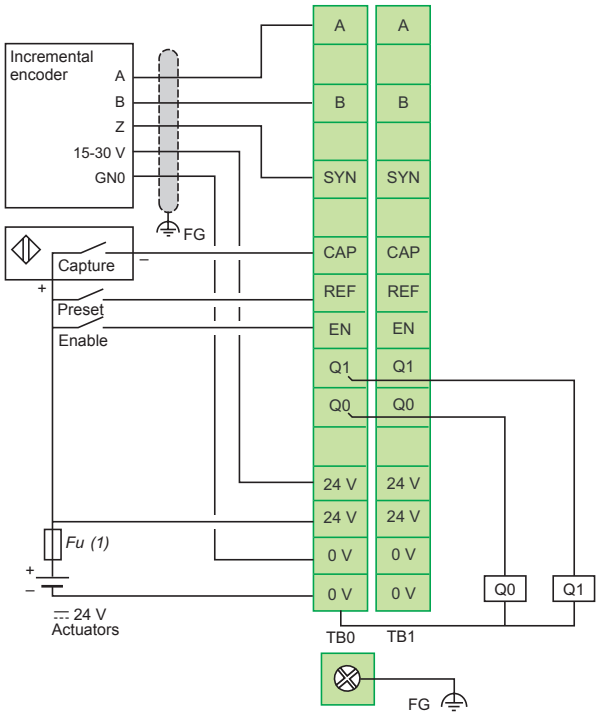

(1) Fu: 3.15 A fast-blow fuse to protect the module electronics in the event of reversed polarity of the output power supplies.
For connection of the functional ground (FG), see page 40, detail **A**.

Modicon M238 logic controller

AS-Interface actuator/sensor bus

AS-Interface master module

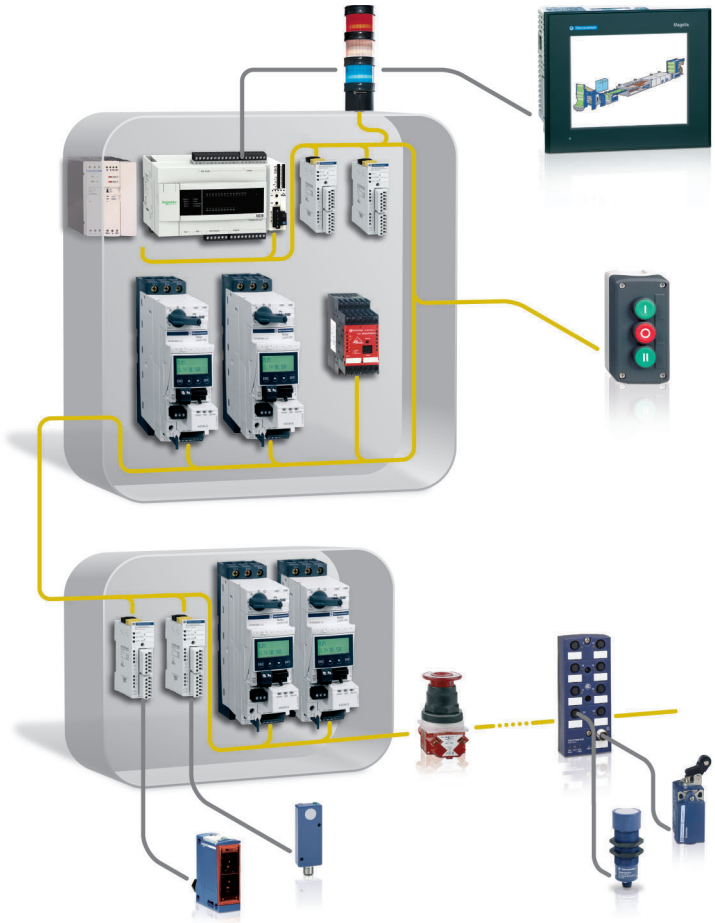

Presentation

AS-Interface master module **TWD NOI 10M3** allows the M238 compact logic controller (version ≥ 2.0) to perform the function of AS-Interface master.

The AS-Interface consists of a master station (M238 compact logic controller) and slave stations. The master, which supports the AS-Interface profile, polls each of the devices connected to the AS-Interface, in turn, and stores information gathered (sensor/actuator status, operating status of the devices) in the controller memory. Communication on the AS-Interface is managed in a way that is totally transparent to the M238 logic controller application program.

The **TWD NOI 10M3** master module manages the following with the AS-Interface M3 profile:
- discrete slave modules (maximum of 62 slaves arranged in 2 banks, A and B, of 31 addresses each),
- analogue slaves (maximum of 7 slaves in bank A).

The AS-Interface M3 profile supports analogue profile 7.3 (7 slaves), but does not support analogue profile S-7.4.
The maximum number of **TWD NOI 10M3** modules per M238 compact logic controller is 2.

An AS-Interface power supply is essential to supply the various modules on AS-Interface. It should preferably be located close to the stations with high power consumption.

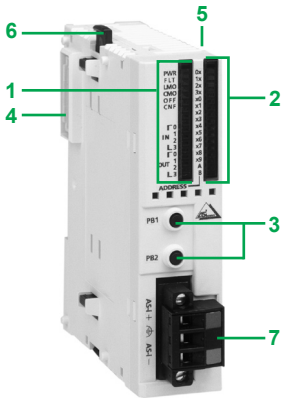

Description

Module **TWD NOI 10M3** takes the form of a standard-size module. It is connected to an M238 compact logic controller in the same way as any I/O module.
It has the following on the front panel:

1 A display block comprising:
- 6 pilot lights indicating the module operating modes:
  - green PWR pilot light: module powered up,
  - red FLT pilot light: error in the configuration loaded,
  - green LMO pilot light: module in local mode,
  - green CMO pilot light: module in connected mode,
  - red CNF pilot light: not used,
  - red OFF pilot light: module in protected, unconnected mode.
- 6 green pilot lights, 3 for inputs, 3 for outputs.

2 A block for displaying the status of the addresses.
3 Two pushbuttons PB1 and PB2 for controlling the status of the slaves by selecting their address and changing the mode.
4 An extension connector for electrical connection to the previous module.
5 A connector (on the RH side) for I/O extension modules **TM2 D●I** ou **TM2 D●O**.
6 A latching mechanism for attachment to the previous module.
7 An AS-Interface yellow cable removable screw terminal block.

Extension module **TWD NOI 10M3** can be mounted as standard on symmetrical ⊔ rail. Fixing kit **TWD XMT5** (sold in lots of 5) allows plate or panel mounting.

Modicon M238 logic controller

AS-Interface actuator/sensor bus

AS-Interface master module

Diagnostics

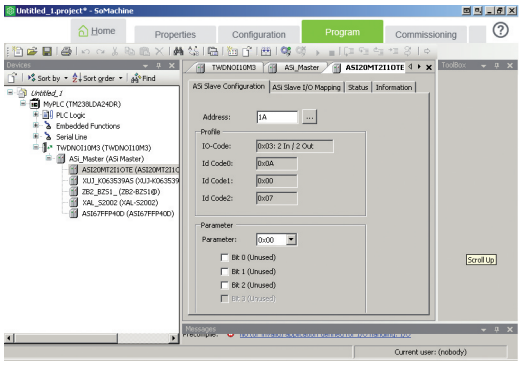

The 30 pilot lights on the front panel of the module are used in conjunction with the two pushbuttons for diagnostics by the Twido controller.
The display block on the front panel of master module **TWD NOI 10M3** allows simplified local diagnostics to be performed by displaying the slaves present on the AS-Interface.

Software set-up

AS-Interface is configured using SoMachine *(1)* software.
The services offered are based on the principle of simplicity:
■ Management of profile tables, parameters and data by the master, in a way that is transparent to the user.
■ Topological addressing of I/O: each AS-Interface slave defined has a topological address assigned to it, in a way that is transparent to the user.
Each AS-Interface sensor/actuator is seen by the M238 compact logic controller in the same way as any “In-rack” I/O.

Characteristics

Module type			TWD NOI 10M3
AS-Interface profile			AS-Interface M3, V 2.11 (profile S-7.4 not supported)
Type of addressing			Standard and extended
Product certifications			AS-Interface n° 47801
Degree of protection			IP 20
Temperature	Operation	**°C**	0…+ 55
	Storage	**°C**	- 25…+ 70
As-Interface external power supply		**⎓ V**	29.5…31.6
Internal current	At ⎓ 5 V	**mA**	80
	At ⎓ 24 V	**mA**	0
AS-Interface consumption at ⎓ 24 V		**mW**	540
Data exchange characteristics			
AS-Interface cycle time	With 1 to 19 slaves	**ms**	3
	With 20 to 62 slaves	**ms**	0.156 x (1 + N) where N = number of active slaves
	With 31 standard slaves or slaves in banks A and B	**ms**	5
	With 62 slaves in banks A and B	**ms**	10
Max. number of modules	Analogue modules *(1)*		7
	Discrete modules *(1)*		62
Max. number of I/O	Standard slaves		248 = 124 inputs + 124 outputs
	Slaves in banks A and B		434 = 248 inputs + 186 outputs
Max. length of AS-Interface cable	Without repeater or line extension	**m**	100
	With line extension TCS ARR01M	**m**	200 (Consult our catalogue “Machines & installations with industrial communications”)
	With 2 repeaters ASI RPT01	**m**	300 (Consult our catalogue “Machines & installations with industrial communications”)

References

TWD NOI 10M3

Description	No. modules per base controller	AS-Interface profile	Number of I/O *(1)*	Reference	Weight kg
AS-Interface master module for Modicon M238 compact logic controllers: **- TM238 LDD24DT - TM238 LFDC24DT - TM238 LDA24DR - TM238 LFAC24DR**	2	M3, V 2.11	62 discrete modules max. 7 analogue modules max.	**TWD NOI 10M3**	0.085

Description	Application	Reference	Weight kg
Fixing kit Sold in lots of 5	For plate or panel mounting of the module	**TWD XMT5**	–

(1) When analogue and discrete modules are connected simultaneously to a system, the analogue modules use addresses 1 to 31 in bank A. When an analogue module uses a certain address, the module addresses having the same number in bank B cannot be occupied by slaves in banks A/B.

Dimensions

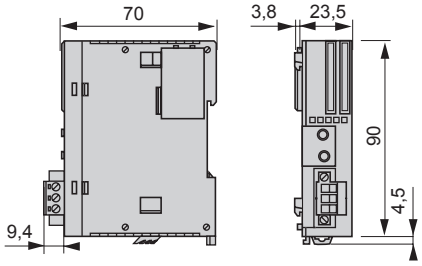

Modicon M238 logic controller

Modicon OTB distributed I/O
Optimum IP 20 I/O system
Interface modules

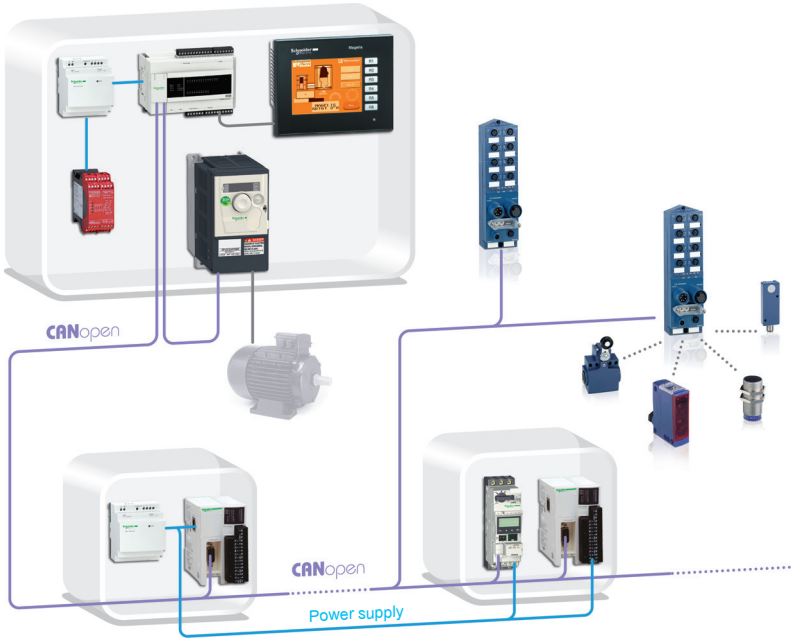

Example of Modicon OTB islands on CANopen bus

Presentation

There is an increasing tendency for machine manufacturers to design their automation systems using modular architectures. The use of distributed inputs/outputs (I/Os) is becoming more and more common. The Modicon OTB offer is an ideal solution for “optimised” type distributed input/output requirements. This offer, complementing the Modicon interface family, has been designed to provide the right technical-economical balance: it meets the needs of machine manufacturers and users seeking the best compromise between size, ease of cabling, setting-up and costs. Open and modular, the Modicon OTB solution enables the creation of industrial I/O islands managed by a master controller (PLC, PC or variable speed drive) via a fieldbus or communication network.

With its expandable block type architecture, the Modicon OTB solution adapts to all configurations of automation system islands. The Modicon OTB offer is particularly economical for small and medium size islands. In addition, the optimised sizes of this offer are ideally suited to the size of enclosures for distributed I/Os, that are located as near to the machine as possible. This solution reduces cabling time and costs and at the same time takes into account the modular architecture of the machine.

Furthermore, the Modicon OTB offer proposes fewer references relating to spare parts and accessories that are required for creating an island.

The Modicon OTB offer has also been designed to be as simple as possible. This offer includes 2 communication bases (interface modules) for the various types of fieldbus:
- CANopen bus,
- Modbus RS 485 Serial Line.

Inputs and outputs are directly integrated in the interface modules. Each base incorporates 20 I/O:
- 12 ⎓ 24 V inputs,
- 6 relay outputs,
- 2 ⎓ 24 V solid-state outputs.

All the bases use a ⎓ 24 V supply. Of monobloc design, each Modicon OTB interface module can be fitted with extension modules of Modicon M238 logic controller.
.
With its range of I/O extensions, the Modicon OTB offer provides a modularity that allows all requirements to be met, commencing with a base that can be fitted with up to 7 discrete I/O modules **TM2 D●●** or analogue I/O modules **TM2 A●●**. The extension modules, like the interface modules, simply clip-on to 35 mm symmetrical rail and enable configurations of up to 244 discrete I/O and up to 42 analogue I/O channels, or a mixture of both types (within the limit of 7 extension modules), to be obtained.

Sensors and actuators are connected to the interface modules and I/O extension modules using removable screw terminal blocks. All Modicon OTB modules provide an IP 20 degree of protection.
To simplify sensor and actuator connections, as well as linking commons, the Modicon OTB offer also includes a commoning module **OTB 9ZZ 61JP**. This module, as with all the other modules of the Modicon OTB range, allows the through connection of the internal bus or network (passively in this case) and enables connection of the commons in two isolated groups for each commoning module

OTB 1C0 DM9LP
Interface module for CANopen bus

TM2 D●●/TM2 A●●
Discrete and analogue I/O extension modules

OTB 9ZZ 61JP
Commoning module

Description : page 53 | Characteristics: pages 54 … | References : page 57 | Dimensions: page 58 | Connections: page 59

Configuration of interface modules

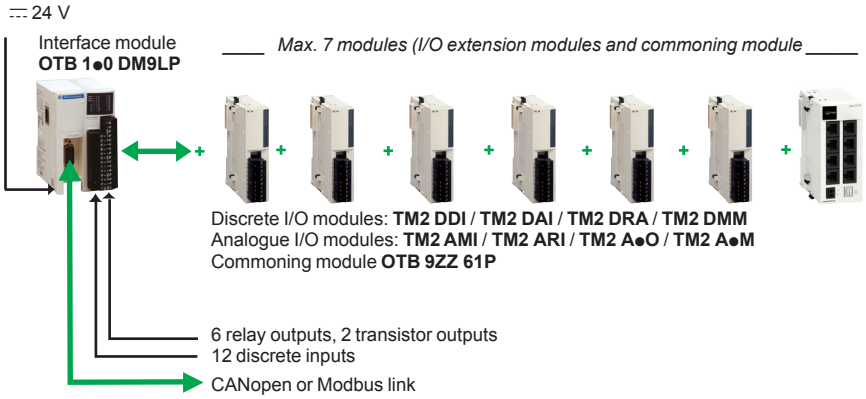

Description

The Modicon **OTB 1●0 DM9LP** *(1)* interface modules comprise:

1 An access door.
2 Indicator lights:
- module and communication status (PWR, RUN, ERR, COM, STAT)
- I/O states (IN● and OUT●)

3 A connector for expansion modules (right-hand side).
4 Two removable screw terminal connectors for connection of inputs/outputs.
5 or **6** Depends on model:
- **5** A SUB-D 15-way connector for connection CANopen bus with **OTB 1CO DM9LP** model.
- **6** Two RJ45 connectors for connection Modbus serial link with **OTB 1SO DM9LP** model.

7 Terminal for connection of ⎓ 24 V supply.
8 One RJ45 connector for operating system update of interface.

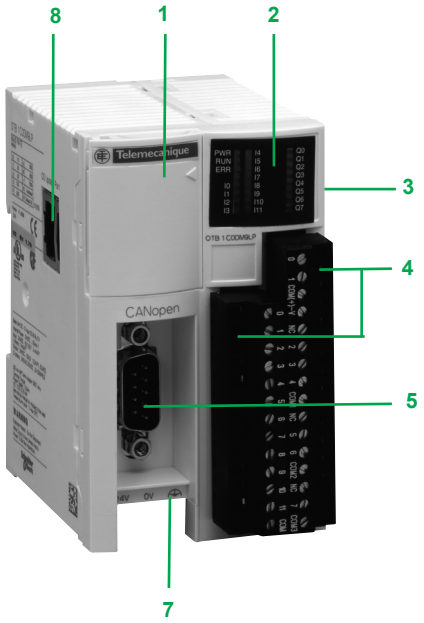

Via access door 1

9 Two or three coding wheels (depending on model) for OTB island address and communication data rate adjustment.

Mounting: the interface modules is mounted on 35 mm symmetrical ⊔ rail. Fixing kit **TWD XMT5** (supplied in lots of 5) allows plate or panel mounting.

*(1) Only the communication part **5**, **6** and **9** is dedicated to each model and can differ, the general description remains the same.*

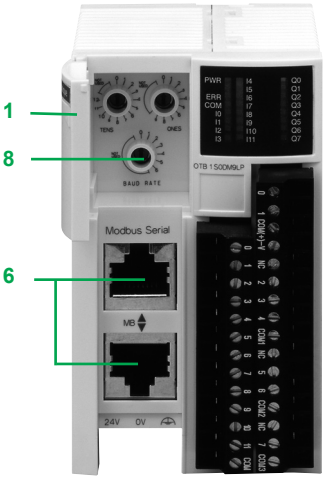

Environmental characteristics

Interface module type			OTB 1C0 DM9LP	OTB 1S0 DM9LP
Products certifications			UL, CSA, CE	
Temperature	Operation	**°C**	0…+ 55	
	Storage	**°C**	- 25…+ 70	
Relative humidity			30…95%, without condensation	
Degree of protection			IP 20	
Degree of pollution	According to IEC/EN 60664		Type 2	
Altitude	Operation	**m**	0…2000	
	Storage	**m**	0…3000	
Vibration resistance	Mounted on 15 mm ⊥ rail	**Hz**	10…57, amplitude 0,075 mm, acceleration 57…150 z	
		m/s²	9.8 (1 gn)	
	Plate or panel mounted (using TWD XMT5 fixing kit)	**Hz**	2…25, amplitude 1,6 mm, accélération 25…100 Hz	
		m/s²	39.2 (4 gn)	
Shock resistance	According to IEC/EN 61131	**m/s²**	147 (15 gn)	
Immunity According to IEC/EN 61000-6-2	Electrostatic discharge		CEI/EN 61000-4-2 (4 kV en contact, 8 kV dans l'air)	
	Radiated electromagnetic fields		According to IEC/EN 61000-4-3 (10V/m : 80 MHz…2 GHz)	
	Rapid transients		According to IEC 61000-4-4 (1 kV for ⎓ 24 V discrete I/O and communication, 2 kV for ⎓ 24 V supply)	
Mounting			On ⊥ 35 mm symmetrical rail	

Interface modules characteristics (except communication, see page 55)

Interface module type			OTB 1C0 DM9LP	OTB 1S0 DM9LP
Type of bus			CANopen	Modbus serial link
Power supply	Nominal voltage	**⎓ V**	24, non isolated	
	Limits values	**⎓ V**	20.4…26.2 including ripple	
	Max. input current	**mA**	700 at 26,2 V	
	Immunity to micro-cuts	**ms**	Max.10	
	Max inrush current at ⎓ 24 V	**A**	50	
	Consumption	**W**	19 (interface module with 7 I/O extension modules)	
Number of ⎓ 24 V inputs			12	
Number and type of outputs			6 relay and 2solid-state	
I/O connections			Removable screw terminal block	
I/O extensions	Max. number of modules		7	
	Max. number of I/O (including 20 I/O of interface module)		- 132 with screw terminal discrete I/O extensions - 188 with spring terminal discrete I/O extensions - 244 with HE10 connector discrete I/O extensions - Screw terminal analogue I/O: up to 7 x 8 In, or 7 x 2 Out, or 7 x (4 In/2 Out)	
Dielectric strength	Between power supply terminals and earth terminals	**V eff**	500 for 1 min	
	Between I/O terminals and earth terminals	**V eff**	500 for 1 min	
Insulation resistance	Between power supply terminals and earth terminals	**MΩ**	> 10 (⎓ 500 V)	
	Between I/O terminals and earth terminals	**MΩ**	> 10 (⎓ 500 V)	
Integrated functions				
Counting	Number of channels		2	
	Frequency		5 kHz x 2 channels or 20 kHz x 2 channels (depending on configuration)	
	Capacity		32 bits	
Movement	Number of channels		2	
	Frequency	**kHz**	7	
	Functions		PWM (output with pulse width modulation) PLS (pulse generator output)	

Communication

CANopen bus

Type of interface module			**OTB 1C0 DM9LP**						
CANopen services	Conformity class		S20						
	Standard		DS 301 V4.02, DR 303-2						
	Profile		DS 401 V2.1						
	Specials		–						
Structure	Physical interface		9-way male SUB-D						
	Topology		Link by daisy-chaining						
	Access method		CSMA-MA, multimaster with priority information						
Transmission	Data rate		10, 20, 50, 125, 250, 500, 800 and 1000 Kbit/s.						
	Médium		Double shielded twisted pairs						
Physical configuration	Number of devices		Max. 63 per segment						
	Data rate		**1 Mbit/s**	**800 Kbit/s**	**500 Kbit/s**	**250 Kbit/s**	**125 Kbit/s**	**50 Kbit/s**	**20 Kbit/s**	**10 Kbit/s**
	Length of bus according to data rate		20 m	40 m	100 m	250 m	500 m	1000 m	2500 m	5000 m
	Max. length of derivation *(1)*		0,6 m	6 m	10 m	10 m	10 m	120 m	300 m	600 m
	Per segment	No. of devices	**64**			**32**			**16**	
		Length of segment *(2)*	Max. 160 m			Max. 185 m			Max. 205 m	
		Equivalent length of each repeater	15 m							
CANopen interface module	LED indicators		Controller status (PWR, RUN et ERR), I/O (I●/Q●)						
	Products certification		cULus, CE						
	Conformity to standards		IEC/EN 61131-2, UL 508, CSA 22.2 No. 213 (Class 1, Division 2, Groups A, B, C, D), CE						

Modbus serial link

Type of interface module			**OTB 1S0 DM9LP**	
Structure	Type		Non-isolated serial lilnk *(4)*, RS 485, 3-wire	
	Access method		Master/slave	
	Toplogy		Tap link connection	
	Physical interface		2 x RJ45 connectors (en parallèle) permettant la topologie chaînage	
Transmission	Mode		Asynchronous in baseband	
	Frame		RTU/ASCII, Half duplex	
	Data rate		1.2…38.4 Kbit/s (19.2 Kbit/s by default)	
	Format		7 or 8 data bits, 1 or 2 stop bit(s)	
	Parity		Even, odd or nome	
	Medium		Double shielded twisted pair	
Physical configuration	Number of devices		Max. 32 maxi per segment	
	Type of link		**Non-isolated**	**Isolated** *(3)*
	Max. lenght	Bus	10 m	1000 m
		Derivation	15 m	40 m
Modbus interface module	LED indicators		Controller status (PWR, COM et ERR), I/O (I●/Q●)	
	Products certification		cULus, CE	
	Conformity to standards		CEI/EN 61131-2, UL 508, CSA 22.2 No. 213 (Class 1, Division 2, Groups A, B, C, D), CE	

(1) For other limitations, consult our catalogue "Machines & installations with industrial communications".

(2) With using the **TSX CAN C●50/100/300** *CANopen cables and the* **TSX CAN C●DD03/1/3/5** *preformed cordsets.*

(3) For isolated link, tap isolation **TWD XCA ISO** *must be used.*

Inputs/outputs characteristics

24 V ⎓ inputs				
Number of input channels				12, type 1 (according IEC/EN 61131)
Nominal input voltage			⎓ V	24 sink/source (positive or negative logic, PNP or NPN)
Common				1
Input voltage limits			⎓ V	20.4…26.4
Nominal input current			mA	4.5 for I0, I1, I6 and I7; 7 for I2…I5 and I8…I11
Input impedance			kΩ	5.3 for I0, I1, I6 and I7; 3,4 for I2…I5 and I8…I11
Electronic filtering time	At state 1		µs	35 for I0, I1, I6 and I7; 40 for I2…I5 and I8…I11
	At state 0		µs	45 for I0, I1, I6 and I7; 150 for I2…I5 and I8…I11s
Configurable filtering time			ms	- Electronic filtering time - 3 ms ou 12 ms depending on configuration
Isolation	Between channels			None
	Between channels and internal logic		V eff	∿ 500 for 1 min
Transistor output				
Number of output channels				2 (Q0 and Q1)
Output logic				Source (positive logic, PNP)
Common				1
Nominal output values	Voltage		⎓ V	24
	Current		A	0,3
Output value limits	Voltage		⎓ V	20.4…28,8
	Current per channel		A	0.36
	Current per common		A	0.72
Response time	At state 1		µs	5
	At state 0		µs	5
Voltage drop	At state 1		⎓ V	Max.1
Maximum inrush current			A	1
Leakage current			mA	0.1
Induction L/R			ms	10 (28.8 V ⎓, 1 Hz)
Overvoltage protection			⎓ V	39 ± 1
Maximum power (filament lamp)			W	8
Isolation	Between channels			Aucun
	Between channels and internal logic		∿ V	∿ 500 for1 min
Relay outputs				
Number of output channels				6 (Q2…Q7)
Commons	Common 1			3 contacts (relay) NO (Q2, Q3 and Q4)
	Common 2			2 contacts (relay) NO (Q5 and Q6)
	Common 3			1 contact (relay) NO (Q7)
Nominal output values *(1)* (resistive or inductive load)	Voltage		⎓ V	30
			∿ V	240
	Current per channel		A	2
	Current per common		A	8
Response time	At state 1		ms	5
	At state 0		ms	2
Bounce time			ms	≤ 1
Min. switchable load			mA	0.1 / ⎓ 0,1 V (reference value)
Contact resistance (unused condition)			mΩ	Max. 30
Isolation voltage			V rms	∿ 500 for1 min
Consumptions for all the outputs	At state 1	⎓ 5 V	mA	30
		⎓ 24 V	mA	40
	At state 0	⎓ 5 V	mA	5
Electrical durability	In AC-1			5 x 10^5 operating cycles with 500 VA load
	In AC-14			5 x 10^5 operating cycles with 250 VA load
	In AC-15			5 x 10^5 operating cycles with 200 VA load
	In DC-1			5 x 10^5 operating cycles with 60 W load
	In DC-13			5 x 10^5 operating cycles with 30 W load

Commoning block characteristics

Type de module				**OTB 9ZZ 61JP**
Application				Passive, inter-module
Commons				2 groups of 10 removable terminals
Nominal output values	Voltage		V	⎓ 19…30 / ∿ 215…240
	Currents	Per channels	A	2
		Per group of commons	A	8

(1) With 1800 operations max./hour;
electric life: min. 100 000 operations, mecanical life: min. 20 x 10^6 operations.

Modicon M238 logic controller

Modicon OTB distributed I/O
Optimum IP 20 I/O system
Interface modules

106292

OTB 1C0 DM9LP

106297

OTB 1S0 DM9LP

106299

OTB 9ZZ 61JP

Interface modules with integrated discrete I/O

Supply voltage	Number and type of integrated I/O			Connection by	Link	Reference	Weight
	Inputs	Solid-state outputs	Relay outputs				kg
⎓ 24 V	12 I ⎓ 24 V IEC type 1 (1 common)	2 O ⎓ 24 V 0.3 A (1 common)	6 O ⎓ 30 V/ ∿ 240 V 2 A (3 commons)	Removable screw terminal block	CANopen bus	**OTB 1C0 DM9LP**	0.195
					Modbus RS 485 serial link	**OTB 1S0 DM9LP**	0.190

Separate parts

Description	Application	Number of commons	Connection by	Number of wires	Reference	Weight
						kg
Commoning modules	For grouping input or output commons, 8 A maximum; inter-module	2 isolated groups	Removable screw terminal block	2 x 10	**OTB 9ZZ 61JP**	0.100
Fixing kit Sold in lot of 5	Plate or panel mounting of modules	–	–	–	**TWD XMT5**	–
Software and documentation	Configuration software "Modicon Configuration Tool-Lite" and hardware user guide	–	–	–	**FTX ES01**	0.050

Connection accessories

Description	Application	Reference	Weight
			kg
CANopen bus	Cabling system: junction boxes, cables, cordsets, IP 20 and IP 67 accessories	See pages 66 and 53	
Modbus serial link	Cabling system: ta-off, hub, cables, cordsets, line end adapter	See pages 68 and 69	

Dimensions

OTB 1●0 DM9LP

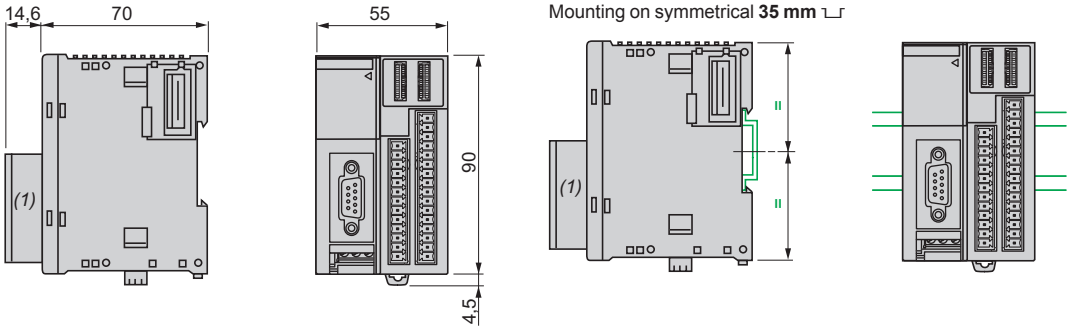

(1) With removable screw terminal block type connector.

OTB 9ZZ 61JP

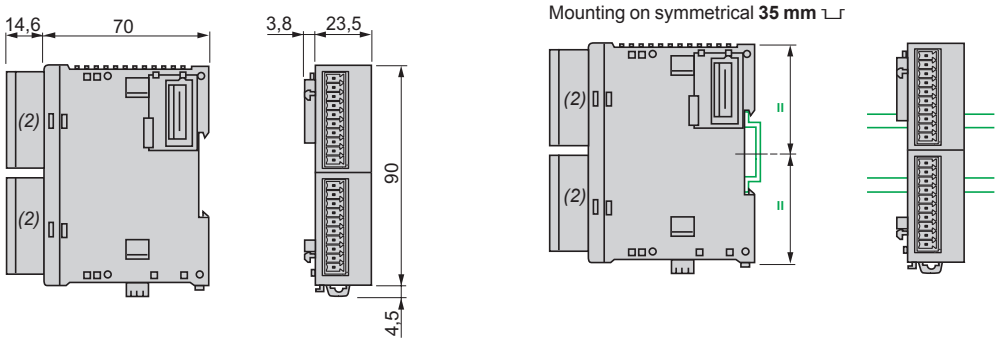

(2) With removable screw terminal block type connector.

Installation rules

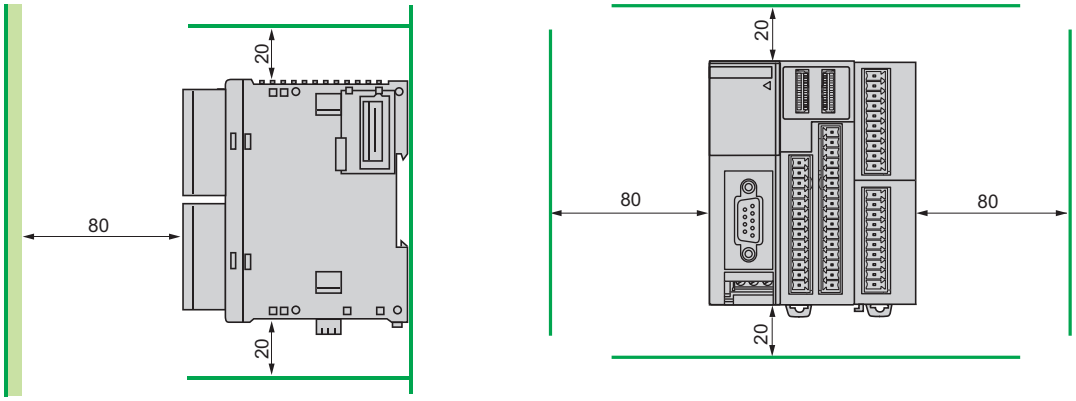

- Must not be horizontally or flat mounted
- Avoid placing the module over a source of heat (transformer, power supply, power contactor, etc.)

Connections

OTB 1●0 DM9LP

24 V ⎓ power supply

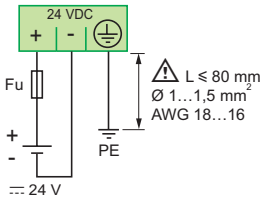

Fu : 2A fast-blow fuse **ABE 7FU200**

⎓ 24 V inputs, 24 V ⎓ transitor outputs and relay outputs

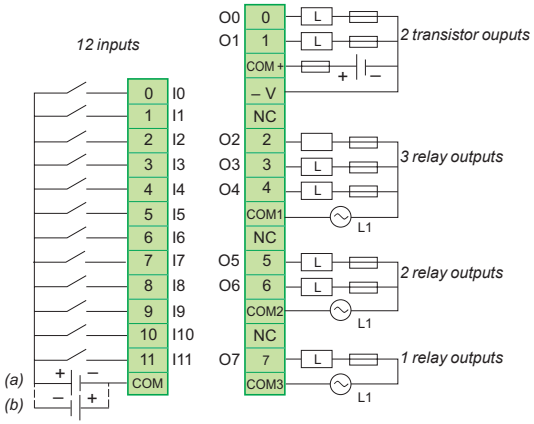

(a) 24 V ⎓ power supply for sink inputs (positive logic).
(b) 24 V ⎓ power supply for source inputs (negative logic).

OTB 9ZZ 61JP

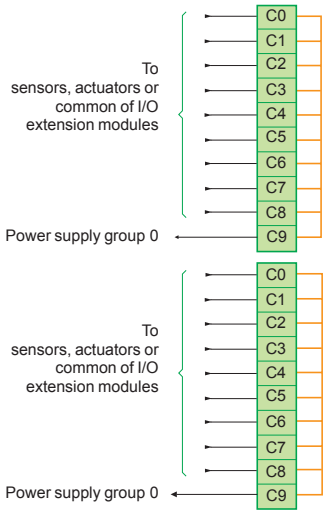

Internal links

Modicon M238 logic controller

Ethernet Modbus/TCP network

TwidoPort interface module

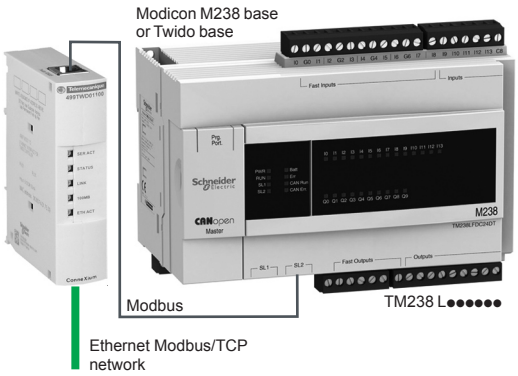

Presentation

TwidoPort module **499 TWD 01100** is an Ethernet interface that is easy to use and dedicated to Modicon M238 logic controllers and Twido compact or modular programmable controllers. It allows incorporation of this controllers into an Ethernet network as a passive device (slave). The TwidoPort module is ready for use.
When connected to the integrated RS 485 serial port acts as a gateway between the Ethernet network and the controller's Modbus serial link port.

The main characteristics of the TwidoPort module are as follows:
■ Connects to the RS 485 of the Modicon M238 controller (marked SL1 or SL2 depending on model) or the RS 485 port of the Twido controller; no external auxiliary supply
is necessary.
■ Ethernet configuration:
□ takes the Ethernet configuration from the Twido application configuration (normal mode),
□ supports manual configuration using Telnet.
■ Provides Ethernet statistics via a Telnet session.

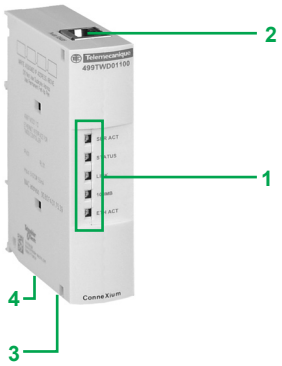

Description

The TwidoPort **499 TWD 01100** interface module comprises:

1 Five pilot lights indicating the status of the interface and of the TwidoPort module links.
2 An RJ45 type connector for connection of the power supply and of the link to the controller's integrated RS 485 port. This connection is made using connection cable **TWD XCA RJP03P** supplied with the TwidoPort interface module in case of the Twido controller.
3 An RJ45 connector (accessed through the bottom of the module) for connection to the Ethernet TCP/IP network.
4 An earthing screw (accessed through the bottom of the module).

The TwidoPort interface module can be mounted as standard on a symmetrical ⊔ rail. Fixing kit **TWD XMT5** (sold in lots of 5) allows plate or panel mounting (2 x Ø 4.3 holes).

To order separately
For connecting to the Modicon M238 controller, the cordset for connection Modbus **XBT Z9980** (lenght 2.5 m).

Modicon M238 logic controller

Ethernet Modbus/TCP network

TwidoPort interface module

Characteristics

TwidoPort module		499 TWD 01100
Services	Class	A10
	Web services	No Web server
	Basic Ethernet Modbus/TCP communication services	Modbus messaging (read/write of data words) BOOTP function Auto MDI/MDX function (avoids the use of crossover cable) Supports manual configuration using Telnet.
Structure	Physical interface	10BASE-T/100BASE-TX, standard RJ45 type connector
	Binary rate	10/100 Mbit/s with automatic recognition
	Medium	Twisted pair
TwidoPort interface module	Operating temperature	0...55 °C
	Relative humidity	10…95 % (without condensation)
	Degree of protection	IP 20
	Max. consumption at ⎓ 5 V	180 mA
	Supply	5 ± 0.5 V provided by the Modicon M238 or Twido base controller
	Conforming to standards	UL 508, CSA 1010, FCC Class A, EN 61131-2, CE
	LED indicator	Activity on the Modbus serial link (SER ACT), controller status (STATUS), Ethernet link status (LINK), binary rate 100 Mbit/s (100 MB), Ethernet network activity (ETH ACT)

References

499 TWD 01100

Description	Controller bases	Function	Reference	Weight kg
TwidoPort interface module	Modicon M238 24I/O Twido compact 10/16/24/40 I/O Twido modular 20/40 I/O	10/100 Mbit/s Auto MDIX function Connection cordset to Twido base controller TWD XCA RJP03P included (length 0.3 m)	**499 TWD 01100**	0.200

Description	Use	Length	Reference	Weight kg
Modbus RS 485 cordsets	Connection to Modicon M238 Equiped with 2 RJ45 connectors	2.5 m	**XBT Z9980**	0.100

Ethernet Modbus/TCP or Ethernet IP network architecture

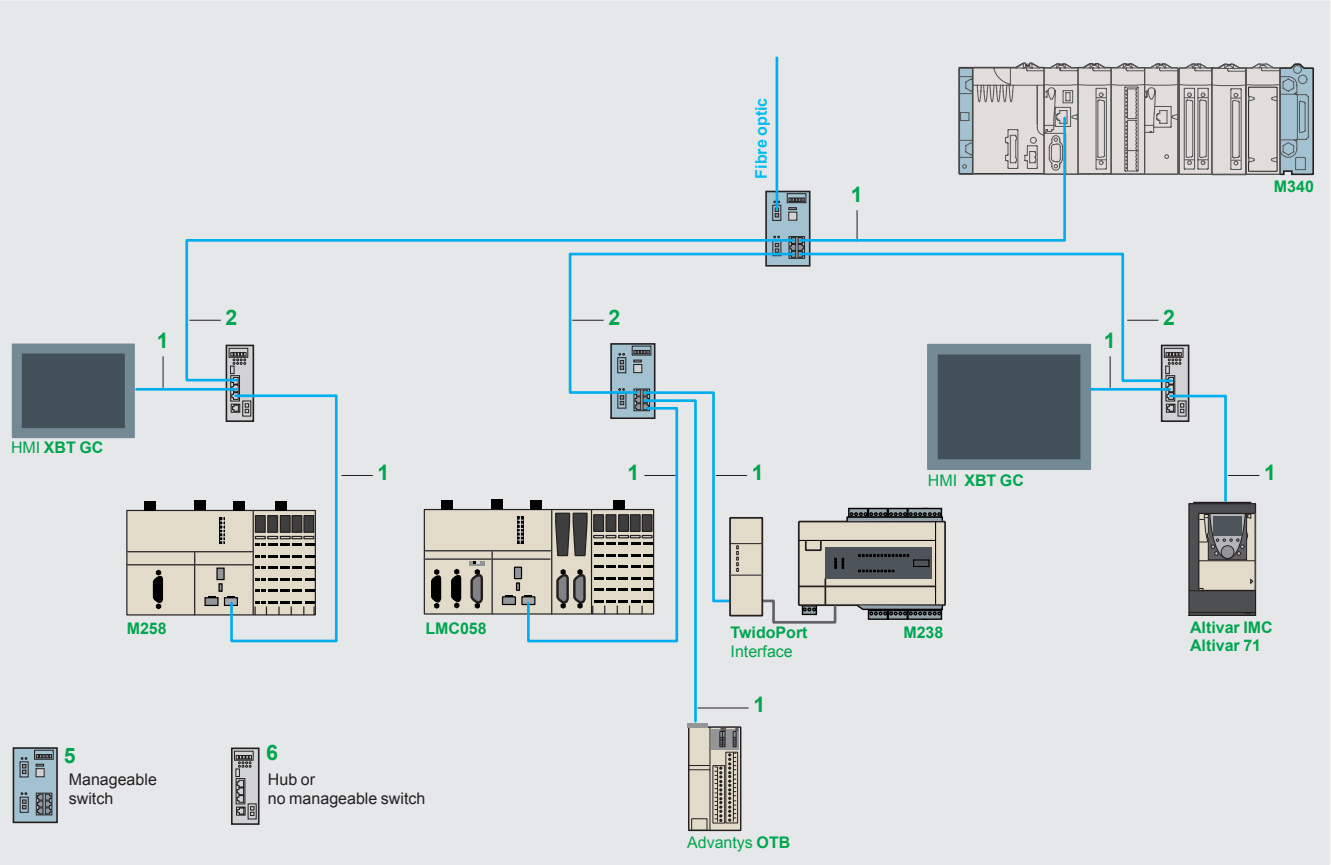

References *(1)*

Shielded copper connection cables

ConneXium shielded copper connection cables are available in two versions to comply with the different standards and approvals in force:

■ **Shielded twisted pair copper cables to standard EIA/TIA 568**

These cables conform to:
- □ standard EIA/TIA 568, category CAT 5E,
- □ standard IEC 11801/EN 50173, class D.

Their flame resistance conforms to:
- □ NFC 32070# classification C2
- □ standards IEC 322/1,
- □ Low Smoke Zero Halogen (LSZH).

■ Shielded twisted pair copper cables, UL and CSA 22.1 approved

These cables conform to:
- □ standards UL and CSA 22.1.

Their flame resistance conforms to NFPA 70.

"Do It Yourself" cable and connectors

The ConneXium "Do It Yourself" range allows the user to make up Ethernet copper cables on site and to the required length. They are designed for cabling Ethernet 10/100 Mbit/s networks. The maximum length of cables made up in this way is 80 m. They can be assembled quickly using a knife and cutting pliers (no special tools are required).

Description	Characteristics	Length	Reference	Weight kg
Ethernet copper cable 2 shielded twisted pairs 24 AWG	Conforming to the above-mentioned standards and approvals	300 m	**TCS ECN 300R2**	–
RJ 45 connector	Conforming to EIA/TIA-568-D	–	**TCS EK3 MDS**	–
M12 connector	Conforming to IEC 60176-2-101	–	**TCS EK1 MDRS**	–

(1) For other versions (fibre optic, switches, …): please consult our "Machines and Installations with Industrial Communications" catalogue.

490 NT● 000 ●●

TCS ESU 043F1N0

TCS ESM 043F2C●0

499 NMS/NSS 251 02

TCS ESM 083F2C●0

TCS ESU 051 F0

References (continued)

Shielded twisted pair cables to standard EIA/TIA568

Description	Pre-formed at both ends	Item	Length	Reference	Weight kg
Straight cables	2 x RJ45 connectors For connection to terminal equipment (DTE)	1	2 m	**490 NTW 000 02**	–
			5 m	**490 NTW 000 05**	–
			12 m	**490 NTW 000 12**	–
			40 m	**490 NTW 000 40**	–
			80 m	**490 NTW 000 80**	
Crossover cables	2 x RJ45 connectors For connection between hubs, switches and transceivers	2	5 m	**490 NTC 000 05**	–
			15 m	**490 NTC 000 15**	–
			40 m	**490 NTC 000 40**	–
			80 m	**490 NTC 000 80**	–

Shielded twisted pair cables, UL and CSA 22.1 approved

Description	Pre-formed at both ends	Item	Length	Reference	Weight kg
Straight cables	2 x RJ45 connectors For connection to terminal equipment (DTE)	1	2 m	**490 NTW 000 02U**	–
			5 m	**490 NTW 000 05U**	–
			12 m	**490 NTW 000 12U**	–
			40 m	**490 NTW 000 40U**	–
			80 m	**490 NTW 000 80U**	–
Crossover cables	2 x RJ45 connectors For connection between hubs, switches and transceivers	2	5 m	**490 NTC 000 05U**	–
			40 m	**490 NTC 000 40U**	–
			80 m	**490 NTC 000 80U**	–

Shielded twisted pair cable for IP 67 switch

Description	Pre-formed at both ends	Item	Length	Reference	Weight kg
Straight cables	1 x IP 67 4-way M12 connector and 1 x RJ45 connector	8	1 m	**TCS ECL 1M3M 1S2**	–
			3 m	**TCS ECL 1M3M 3S2**	–
			5 m	**TCS ECL 1M3M 5S2**	–
			10 m	**TCS ECL 1M3M 10S2**	–
			25 m	**TCS ECL 1M3M 25S2**	–
			40 m	**TCS ECL 1M3M 40S2**	–

ConneXium hub

Description	Number of ports		Item	Reference	Weight
	Copper cable	Fibre optic			kg
Twisted pair hub 10BASE-T copper ports, RJ45 shielded connectors	4	–	6	**499 NEH 104 10**	0.530

ConneXium switches

Description	Number of ports		Item	Manag -eable	Reference	Weight
	Copper cable	Fibre optic				kg
Optimised twisted pair switch 10BASE-T/100BASE-TX copper ports, RJ45 shielded connectors 100BASE-FX optic port, SC connectors	3	–	6	No	**TCS ESU 033FN0**	0.113
	4	1	6	No	**TCS ESU 043FN0**	0.120
	5	–	6	No	**TCS ESU 053FN0**	0.113
Twisted pair switches 0BASE-T/100BASE-TX copper ports, RJ45 shielded connectors	8	–	6	No	**499 NES 181 00**	0.230
	8	–	5	Yes	**TCS ESM083F23F0**	0.410
Twisted pair and fibre optic switches 10BASE-T/100BASE-TX copper ports, RJ45 shielded connectors. 100BASE-FX optic ports, SC connectors	3	1, multimode	5	Yes	**TCS ESM043F1CU0**	0.400
	2	2, multimode	5	Yes	**TCS ESM043F2CU0**	0.400
	3	1, single-mode	5	Yes	**TCS ESM043F1CS0**	0.400
	2	2, single-mode	5	Yes	**TCS ESM043F2CS0**	0.400
	4	1, multimode	6	No	**499 NMS 251 01**	0.330
	3	2, multimode	6	No	**499 NMS 251 02**	0.335
	4	1, single-mode	6	No	**499 NSS 251 01**	0.330
	3	2, single-mode	6	No	**499 NSS 251 02**	0.335
	7	1, multimode	5	Yes	**TCS ESM083F1CU0**	0.410
	6	2, multimode	5	Yes	**TCS ESM083F2CU0**	0.410
	7	1, single-mode	5	Yes	**TCS ESM083F1CS0**	0.410
	6	2, single-mode	5	Yes	**TCS ESM083F2CS0**	0.410
IP 67 twisted pair switch *(1)* 10BASE-T/100BASE-TX copper ports, shielded M12 connectors (type D)	5	–	–	No	**TCS ESU 051 F0**	0.210

(1) Require special cables with M12 connectors for their ⎓ 24 V supply: **XZC P1●64L●.**

Modicon M238 logic controller

CANopen bus

Integrated port CANopen bus

Presentation

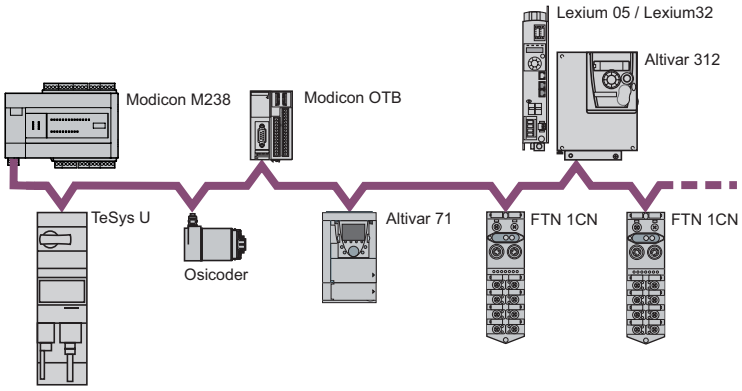

Schneider Electric has selected CANopen for its machines and installations because of its wealth of functions and its resulting benefits in the automation world. This decision was based on the general acceptance of CANopen, and the fact that CANopen products are increasingly used in control system architectures.

CANopen is an open network supported by more than 400 companies worldwide, and promoted by CAN in Automation. CANopen conforms to standards EN 50325-4 and ISO 15745-2.

Schneider Electric is heavily involved in working groups, which are important for machine and installation architectures, systems and products.

CANopen brings transparency to Ethernet

The CANopen bus is a multi-master bus ensuring reliable, deterministic access to real-time data in control system devices. The CSMA/CA protocol is based on broadcast exchanges, sent cyclically or on an event, to ensure optimum use of the passband. A message handling channel can also be used to define slave parameters.

The bus uses a double twisted pair on which, with the Modicon M238 logic controller, 16 slaves devices maximum are connected by daisy-chaining or by tap junctions. The variable data rate between 50 Kbit/s and 1 Mbit/s depends on the length of the bus (between 1,000 m and 20 m).
Each end of the bus must be fitted with a line terminator.

The CANopen bus is a set of profiles on CAN systems, possessing the following characteristics:
- Open bus system
- Data exchanges in real time without overloading the protocol
- Modular design allowing modification of size
- Interconnection and interchangeability of devices
- Standardized configuration of networks
- Access to all device parameters
- Synchronization and circulation of data from cyclic and/or event-controlled processes (short system response time)

The **TM238 LFDC24DT** and **TM238 LFAC24DR** compact bases integrated a CANopen port (conformity M20 class) perform the role of master on the bus.

TeSys U starter-controllers with communication module.

Modicon OTB

Modicon FTB

Altivar 312

Lexium ILA1B

Connectable Schneider Electric devices

The following Schneider Electric devices can be connected to the CANopen bus:
- Ø 58 mm Osicoder multi-turn absolute encoders **XCC 3510P/3515C S84CB.**
- TeSys U starter-controllers with **LUL C08** communication module.
- TeSys T motor management system with **LTM R●●C●●** controllers.
- Modicon OTB IP 20 Optimum distributed I/O with **OTB 1C0 DM9LP** interface module.
- Modicon FTB/FTM IP 67 I/O splitter boxes **FTB 1CN●●●●●** monobloc.
- Preventa configurable safety controllers **XPS MC16ZC/32ZC**.
- Altivar 312 variable speed drives for asynchronous motors (0.18…15 kW) **ATV 312H ●●●●●**.
- Altivar 61/71 variable speed drives for asynchronous motors (0.75…630 kW) **ATV 61H /71H ●●●●●**.
- Lexium 05/ Lexium 32 servo drives (0,15…7 kW) for BSH/BSM servo motors **LXM 05A●D●●●●/ LXM 32A●D●●●●**.
- Integrated training Lexium **ILA1B**, **ILE1B** and **ILS1B**.

Modicon M238 logic controller

CANopen bus

Integrated port CANopen bus

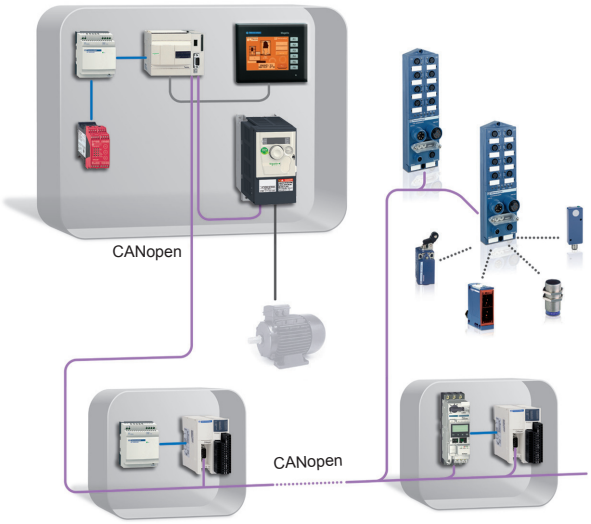

Presentation

TM238 LFDC24DT and **TM238 LFAC24DR** logic controllers allow to act as CANopen master.
The bus consists of a master station, the Modicon M238 controller and slave stations. The master is in charge of configuration, exchanges and diagnostics on the slaves.

The CANopen bus is a communication type bus and allows management of various slaves such as:
- Discrete slaves,
- Analogue slaves,
- Variable speed controllers,
- Motor starters,
- ….

The Modicon M238 CANopen master controls up to 16 slaves, each with an input PDO (*Process Data Object*) and an output PDO.
If a slave has more than one PDO, the maximum number of slaves is reduced by an equivalent number.

CANopen conformity class

Schneider Electric has defined the conformity classes for CANopen master and slave devices. Conformity classes are used to identify the services and levels of service supported by each CANopen device or product. These services are described in section 4 of our "Machines & Installations with industrial communications" catalogue.
The table below shows product combination possibilities according to their conformity class.

Conformity class		Produit esclave		
		S10	S20	S30
Master product	M10			
	M20			
	M30			

Combination possible: Modicon M238 controller master M20 classe with slave device S10 and S20 classes

Use restriction: Modicon M238 controller master M20 class with slave device S30 class limits the level of service to that of the lower conformity class, either S20.

Characteristics

Type of base				TM238 LFDC24DT, TM238 LFAC24DR						
CANopen port	Standards			DS 301 V4.02, DR 303-1						
	Class			Conformity class M20, limit of 16 slaves						
	Data rate	Max. length	m	20	50	100	125	250	500	1000
		Data rate	Kbit/s	1000	800	500	425	250	125	50
	No. of slaves			16 max, with max. limit of: 64 TDPOs and 64 RPDOs						
	Line matching			Line termination resistor supplied with the screw terminal block, to be mounted when necessary						
	Connection			Removable screw terminal block						

Reference

TM238 LFDC24DT

TM238 LFAC24DR

Number of I/O	Inputs	Outputs	No. of I/O extension modules	Integrated serial links	Reference	Weight kg
Compact bases, embedded CANopen port						
■ 24 V ⎓ power supply						
24 I/O	6 x 24 V ⎓ (sink/source) 8 x 24 V ⎓ fast (sink)	10 transistor (source) including 4 fast	7 modules max.	1 RS 232/485 1 RS 485	**TM238 LFDC24DT**	0.595
■ 100-240 V ∿ power supply						
24 I/O	6 x 24 V ⎓ inputs (sink/source) 8 x 24 V ⎓ fast inputs (sink)	4 transistor outputs (source) and 6 relay outputs	7 modules max.	1 RS 232/485 1 RS 485	**TM238 LFAC24DR**	0.595

Modicon M238 logic controller

CANopen bus

Cabling system

CANopen architecture

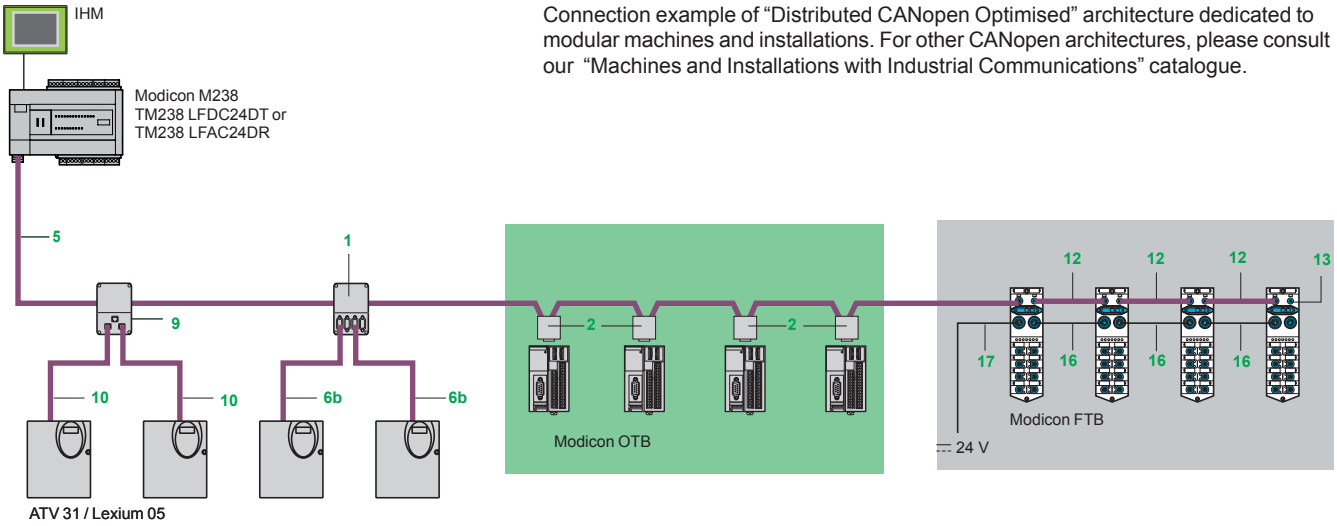

Connection example of "Distributed CANopen Optimised" architecture dedicated to modular machines and installations. For other CANopen architectures, please consult our "Machines and Installations with Industrial Communications" catalogue.

References

TSX CAN TDM4

VW3 CAN TAP2

TSX CAN KCD F90T

TSX CAN KCD F180T

TSX CAN KCD F90TP

Standard junction boxes and connectors

Description	Composition	Item	Length	Reference	Weight kg
CANopen IP 20 tap junction box	4 SUB-D ports. Screw terminal blocks for connection of main cables Line end adapter	1	–	**TSX CAN TDM4**	0.196
IP 20 connectors CANopen 9-way SUB-D female. Line end adapter switch	Elbowed (90°)	2	–	**TSX CAN KCDF 90T**	0.046
	Straight *(2)*	–	–	**TSX CAN KCDF 180T**	0.049
	Elbowed (90°) with 9-way SUB-D connector for connection to PC or diagnostic tool	–	–	**TSX CAN KCDF 90TP**	0.051
M12 connectors IP 67	Male	–	–	**FTX CN 12M5**	0.050
	Female	–	–	**FTX CN 12F5**	0.050
CANopen IP 20 tap junction box for Altivar and Lexium 05	2 x RJ45 ports	9	–	**VW3 CAN TAP2**	–

Standard IP 20 pre-formed cables

Description	Application	Item	Length	Unit reference	Weight kg
CANopen cables (2 x AWG 22 2 x AWG 24)	For standard environments *(3)*, CE marking: low fume emission. Halogen-free. Non flame propagating (IEC 60332-1)	5	50 m	**TSX CAN CA50**	4.930
			100 m	**TSX CAN CA100**	8.800
			300 m	**TSX CAN CA300**	24.560
	For standard environments *(3)*, UL certified, CE marking: non flame propagating (IEC 60332-2)	5	50 m	**TSX CAN CB50**	3.580
			100 m	**TSX CAN CB100**	7.840
			300 m	**TSX CAN CB300**	21.870
	For standard environments *(3)* or mobile installation, CE marking: low fume emission. Halogen-free. Non flame propagating (IEC 60332-1). Oil resistant	5	50 m	**TSX CAN CD50**	3.510
			100 m	**TSX CAN CD100**	7.770
			300 m	**TSX CAN CD300**	21.700
CANopen pre-formed cables 1 x 9-way SUB-D female connector at each end.	For standard environments *(3)*, CE marking: low fume emission. Halogen-free. Non flame propagating (IEC 60332-1)	–	0.3 m	**TSX CAN CADD03**	0.091
			1 m	**TSX CAN CADD1**	0.143
			3 m	**TSX CAN CADD3**	0.295
			5 m	**TSX CAN CADD5**	0.440
	For standard environments *(3)*, UL certified, CE marking: non flame propagating (IEC 60332-2)	–	0.3 m	**TSX CAN CBDD03**	0.086
			1 m	**TSX CAN CBDD1**	0.131
			3 m	**TSX CAN CBDD3**	0.268
			5 m	**TSX CAN CBDD5**	0.400

(1) Connector **VW3 CAN KCDF 180T** *may also be used for connection to a Controller Inside programmable card.*
(2) Standard environment: without any particular environmental restrictions, operating temperature between + 5 °C and + 60 °C, and for fixed installation.
(3) Harsh environments: resistant to hydrocarbons, industrial oils, detergents, solder splashes, hygrometry up to 100%, saline environment, wide temperature variations, operating temperature between - 10 °C and + 70 °C, or mobile installation.

References (continued)

Standard IP 20 pre-formed cables (continued)

Description	Composition	Item	Length	Unit reference	Weight kg
CANopen pre-formed cables	Pre-formed cables with 1 x 9-way SUB-D female connector and 1 x RJ45 connector	6b	0.5 m	**TCS CCN 4F3 M05T**	–
			1 m	**TCS CCN 4F3 M1T**	–
				VW3 M38 05 R010 *(1)*	–
			3 m	**TCS CCN 4F3 M3T**	–
	Pre-formed cables with 2 x 9-way SUB-D connectors, 1 female and 1 male	–	0.5 m	**TLA CD CBA 005**	–
			1.5 m	**TLA CD CBA 015**	–
			3 m	**TLA CD CBA 030**	–
			5 m	**TLA CD CBA 050**	–

Standard IP 67 pre-formed cables

CANopen pre-formed cables	Pre-formed cables with 2 x 5-way, elbowed, M12 connectors, A coding (1 male connector and 1 female connector)	12	0.3 m	**FTX CN 3203**	0.40
			0.6 m	**FTX CN 3206**	0.70
			1 m	**FTX CN 3210**	0.100
			2 m	**FTX CN 3220**	0.160
			3 m	**FTX CN 3230**	0.220
			5 m	**FTX CN 3250**	0.430

IP 20 connection accessories

CANopen connector for Altivar 71 *(2)*	9-way SUB-D female. Line end adapter switch. 180° cable entry	–	–	**VW3 CAN KCDF 180T**	–
Adapter for Altivar 71 variable speed controller	CANopen SUB-D to RJ45 adapter	–	–	**VW3 CAN A71**	–
Pre-formed CANopen cables	1 RJ45 connector at each end.	10	0.3 m	**VW3 CAN CARR03**	–
			1 m	**VW3 CAN CARR1**	–
CANopen bus adapter for Lexium 17D	Hardware interface for link conforming to the CANopen standard + 1 connector for connection of PC terminal	–	–	**AM0 2CA 001V000**	0.110
Y connector	CANopen/Modbus	–	–	**TCS CTN011M11F**	–

VW3 CAN A71

AM0 2CA 001V000

IP 67 connection accessories for Advantys FTB/FTM monobloc and modular splitter boxes

Description	Composition	Item	Length m	Reference	Weight kg
IP 67 line terminator	Equipped with one M12 connector (for end of bus)	13	–	**FTX CNTL12**	0.010
⎓ 24 V supply connection cables	Equipped with two 5-way, 7/8 type connectors	16	0.6	**FTX DP2206**	0.150
			1	**FTX DP2210**	0.190
			2	**FTX DP2220**	0.310
			5	**FTX DP2250**	0.750
	Equipped with one 5-way, 7/8 type connector at 1 end with free wires at the other end	17	1.5	**FTX DP2115**	0.240
			3	**FTX DP2130**	0.430
			5	**FTX DP2150**	0.700
T-connector for power supply	Equipped with two straight, 5-way, 7/8 type connectors	–	–	**FTX CNCT1**	0.100

FTX DP21●●

(1) Cable equipped with line end adapter.
(2) For variable speed controllers **ATV 71H●●●M3**, **ATV 71HD11M3X**, **HD15M3X**, **ATV 71H075N4**... **HD18N4**, *this connector can be replaced by connector* **TSX CAN KCDF 180T**.
(3) Standard environment: without any particular environmental restrictions, operating temperature between + 5 °C and + 60 °C, and for fixed installation.

Modicon M238 logic controller

Modbus and character mode serial link

Cabling system

Modbus cabling system

Non isolated link (Modicon M238 master)

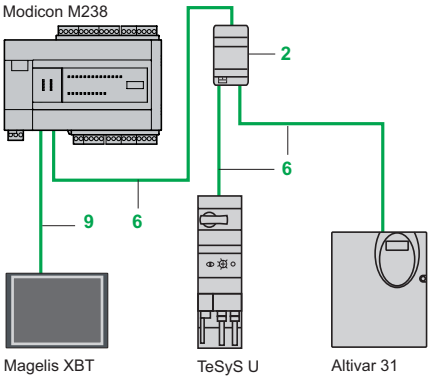

Cable length between Modicon M238 and Altivar 31: ≤ 30 m max.

★ *Line polarisation active*

■ *Line end adapter*

Isolated link (Modicon M238 master)

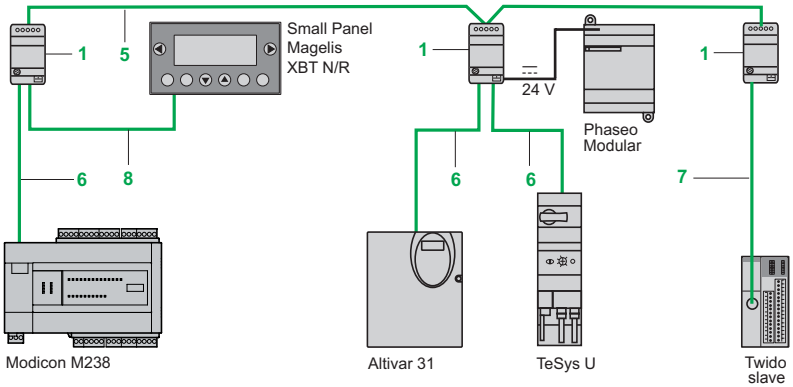

- Total length of cables between tap isolation boxes 1: ≤ 1000 m
- Length of tap link cables 6, 7 or 8: ≤ 10 m

References


TWD XCA ISO


TWD XCA T3RJ


LU9 GC3

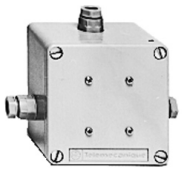
TSX SCA 50


XGS Z24

Tap-off and adapter components for RS 485 serial link

Description	Application	Item	Length	Reference	Weight kg
Tap isolation box Screw terminal block for main cable 2 x RJ45 for tap-off	- RS 485 line isolation *(1)* - Line end adapter (RC 120 Ω, 1nF) - Line pre-polarisation (2 R 620 Ω) ⎓ 24 V supply (screw terminal block) or ⎓ 5 V (via RJ45) Mounting on 35 mm ⊥	1	–	**TWD XCA ISO**	0.100
Tap junction box 1 x RJ45 for main cable 2 x RJ45 for tap-off	- Line end adapter (RC 120 Ω, 1nF) - Line pre-polarisation (2 R 620 Ω) Mounting on 35 mm ⊥	2	–	**TWD XCA T3RJ**	0.080
Modbus hub Screw terminal block for main cable 10 x RJ45 for tap-off	Mounting on 35 mm ⊥, on mounting plate or panel (2 x Ø 4 mm screws)	–	–	**LU9 GC3**	0.500
T-junction boxes 2 x RJ45 for main cable	1 integrated cable with RJ45 connector for Altivar variable speed controller dedicated tap-off	–	0.3 m	**VW3 A8 306 TF03**	–
			1 m	**VW3 A8 306 TF10**	–
Passive tap junction box	- Line extension and single-channel tap-off on screw terminal block - Line end adapter	–	–	**TSX SCA 50**	0.520
RS 232C/RS 485 line converter	- Flow rate 19.2 Kbit/s max. - Without modem signals ⎓ 24 V/20 mA supply, Mounting on 35 mm ⊥	–	–	**XGS Z24**	0.100

(1) Line isolation recommended for distances > 10 m.

References (continued)

Connection cables for RS 485 serial link

Description	Application		Item	Length	Unit reference	Weight kg
Main cables double shielded twisted pair RS 485	Modbus serial link, supplied without connector		5	100 m	**TSX CSA 100**	5.680
				200 m	**TSX CSA 200**	10.920
				500 m	**TSX CSA 500**	30.000
Modbus cordsets RS 485	2 x RJ45 connectors		6	0.3 m	**VW3 A8 306 R03**	0.030
				1 m	**VW3 A8 306 R10**	0.050
				3 m	**VW3 A8 306 R30**	0.150
	1 x RJ45 connector and 1 end with free wires		–	1 m	**TWD XCA FJ010**	0.060
				3 m	**VW3 A8 306 D30**	0.150
	1 mini-DIN connector for Twido controller and 1 RJ45 connector		–	0.3 m	**TWD XCA RJ003**	0.040
				1 m	**TWD XCA RJ010**	0.090
				3 m	**TWD XCA RJ030**	0.160
	1 mini-DIN connector for Twido controller and 1 RJ45 connector *(1) (2)*		7	0.3 m	**TWD XCA RJP03**	0.027
	1 mini-DIN connector for Twido controller and 1 RJ45 connector Dedicated programming protocol *(2) (3)*		–	0.3 m	**TWD XCA RJP03P**	0.027
	1 mini-DIN connector for Twido controller and 1 end with free wires		–	1 m	**TWD XCA FD010**	0.062
				10 m	**TSX CX 100**	0.517
Modicon M238 cordsets (SL1, SL2) **to Magelis HMI terminal**	2 x RJ45 connectors	XBT N200/R400 XBT RT500/511 XBT GT11●●/1335	9	2,5 m	**XBT Z9980**	0,150
	1 x RJ45 connector and 1 x SUB-D 25-way connector	Small Panel XBT N401/410 XBT R410/411	8, 9	2,5 m	**XBT Z938**	0,210
	1 x RJ45 connector and 1 x SUB-D 9-way connector	Advanced panel XBT GT2●●0…7340 XBT GK●●●0	9	2,5 m	**XBT Z9008**	0,150
Cordsets for Magelis Small Panel	2 x RJ45 connectors	Small panel XBT N200/R400 XBT RT500/511	8	3 m	**VW3 A8 306 R30**	0.150
Twido cordsets (terminal port) **to Magelis Small Panel**	1 mini-DIN con. and 1 RJ 45 connector	Small panel XBT N200/R400 XBT RT500/511	–	2.5 m	**XBT Z9780**	0.180
	1 mini-DIN conector and SUD-D 25-way connector	Small panel XBT N401/410 XBT R410/411	–	2.5 m	**XBT Z968**	0.210
Line end adapter	For RJ45 connector R = 120 Ω, C = 1 nf		–	Order in multiples of 2	**VW3 A8 306 RC**	0.200

Connection cables for RS 232 serial link

Description	Application	Length	Reference	Weight kg
Cordset for DTE terminal (printer) *(4)*	Serial link for terminal device (DTE) 1 x RJ45 connector and 1 x 9-way SUB-D female connector	3 m	**TCS MCN 3M4F3C2**	0.150
Cordset for DCE terminal (modem, converter)	Serial link for point to point device (DCE) 1 x RJ45 connector and 1 x 9-way SUB-D male connector	3 m	**TCS MCN 3M4M3S2**	0.150

(1) Forcing the configuration of RS 485 integrated port with TwidoSuite programming protocol parameters.
(2) Carries ⎓ 5 V voltage (supplied by RS 485 integrated port of Twido controller) for **TWD XCA ISO** *tap isolation box (not using the ⎓ 5 V external power supply).*
(3) Allows the using of RS 485 integrated port with the parameters defined in configuration.
(4) If the terminal is equipped with a 25-way SUB-D connector, a SUB-D 25-way female/9-way male adapter **TSX CTC 07** *must also be ordered.*

Modicon M238 logic controller

SoMachine

Simplify machine programming and commissioning

SoMachine software platform

Presentation

SoMachine is the OEM solution software for developing, configuring and commissioning the entire machine in a single software environment, including logic, motion control, HMI and related network automation functions.

SoMachine allows you to program and commission all the elements in Schneider Electric's Flexible and Scalable Control platform, the comprehensive solution-oriented offer for OEMs, which helps you achieve the most optimized control solution for each machine's requirements.

Flexible and Scalable Control platforms include:

Controllers:

- HMI controllers:
  - XBT GC,
  - XBT GT/GK CANopen,
- Logic controllers:
  - Modicon M238,
  - Modicon M258,
- Motion Controller
  - Modicon LMC 058,
- Integrated Controller Card:
  - Altivar IMC,

HMI:

- HMI Magelis graphic panels:
  - XBT GT,
  - XBT GK.

SoMachine is a professional, efficient, and open software solution integrating Vijeo-Designer.
It integrates also the configuring and commissioning tool for motion control devices.
It features all IEC 61131-3 languages, integrated field bus configurators, expert diagnostics and debugging, as well as outstanding capabilities for maintenance and visualisation.

SoMachine integrates tested, validated, documented and supported expert application libraries dedicated to applications in Packaging, Hoisting and Conveying.

SoMachine provides you:

- One software package,
- One project file,
- One cable connection,
- One download operation.

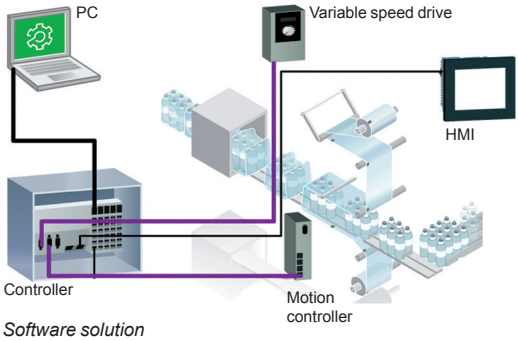

Software solution

Visual graphic user interface

Navigation within SoMachine is intuitive and highly visual. Presentation is optimized in such a way that selecting the development stage of the desired project makes the appropriate tools available. The user interface ensures nothing is overlooked, and suggests the tasks to be performed throughout the project development cycle. The workspace has been streamlined, so that only that which is necessary and relevant to the current task is featured, without any superfluous information.

Learning centre

From the home menu, the learning centre provides several tools to get started with SoMachine. An animated file explains briefly the SoMachine interface and concept. An e-learning allows to run a self-training about SoMachine. A third section gives access to several documented examples of simple coding with SoMachine.

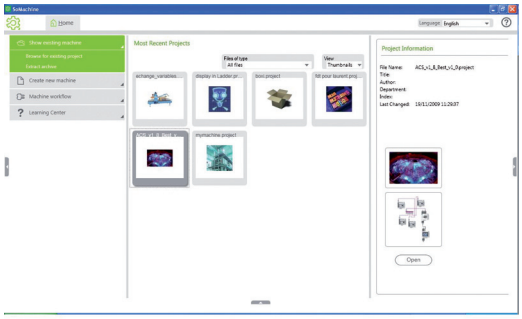

Project management

Projects management

The implemented project management principle allows to browse quickly the existing projects getting the relevant information without the need to open them before selection.
The user can create a new project, starting from several means: using Tested Validated and Documented Architectures, using the provided examples, using an existing project or from scratch. There is quick access to the most recently-used projects.

Modicon M238 logic controller

SoMachine

Simplify machine programming and commissioning

Project properties

For each project, the user has the option to define additional information, through friendly forms. It's also possible to attach documents, a customer picture and a configuration picture.

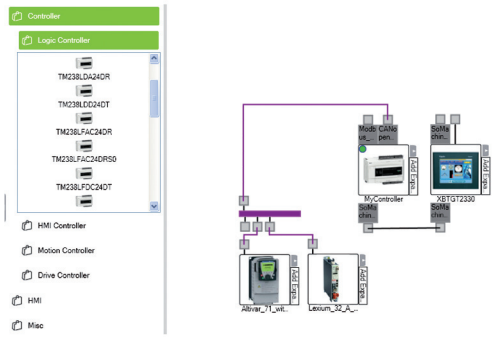

Configuration

Configuration

From the graphic user interface, the user can easily build his architecture and configure the devices of this architecture.

Description of the architecture

A graphic editor can be used to assemble the various elements easily by a simple drag & drop. A devices catalogue is displayed on the left of the screen. It is split into several sections: controllers, HMI, Miscellaneous and search.

Configuration of the device

Directly from the topologic view of the user interface, a simple click drives the user to the configuration screen of the selected device.

Programming and debug

Programming is an essential step, and the user has to carefully design it to be as efficient as possible. Advanced control and HMI functions cover all the needs of an OEM engineer in terms of creating the control and visualisation system.
Powerful tools allow debug and functional tests such as simulation, step by step execution, break points, trace.

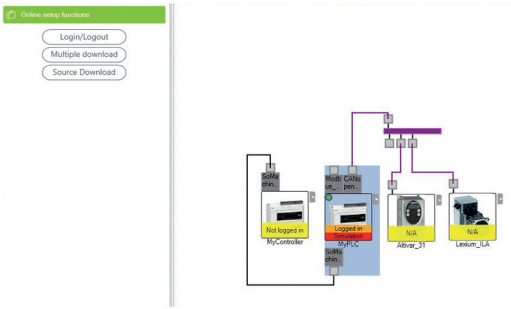

Commissioning

Commissioning

For an easy and fast diagnostic, the menu commissioning allows the user to check the online state of his architecture.Through the topologic view of the configuration, the devices display if you are logged in or not, as well as if they are in run or stop mode.

Documentation

Because a printed file of the project is an important element, it is possible to build and customize the project report:
- select the items to be included in the report,
- organize the sections,
- define the page layout
- and then launch the printing.

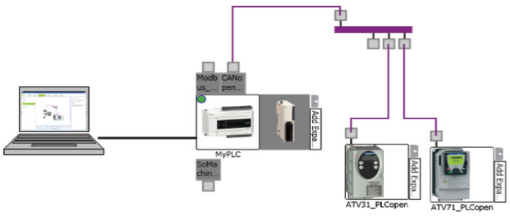

Transparency

Transparency

SoMachine supports Device Type manager (DTM) because it is a field device tool (FDT) container.
With DTM's representing field device in SoMachine, direct communications are possible to every single device via SoMachine, the controller and the field bus CANopen, thus avoiding the lead for individual cable connections.
From the SoMachine unique environment, the remote devices can be set-up off-line and tuned on-line.

Dedicated OEM application libraries (AFB libraries)

SoMachine can be extended through its solution extension CD. It integrates tested, validated, documented and supported expert application libraries dedicated to many OEM applications. Their simple configuration speeds up design, commissioning, installation and troubleshooting.
These libraries cover the following applications:
- Packaging,
- Hoisting,
- Conveying.

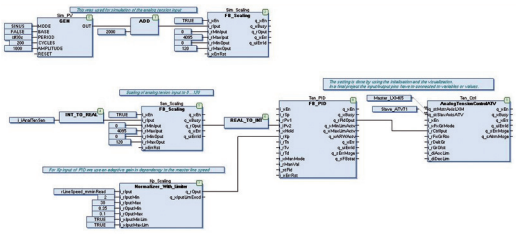

Application Function Blocks

Tested Validated Documented Architectures (TVDA)

SoMachine provides a variety of preset projects with ready-to-use architectures you can adapt to individual requirements. Some of them are generic TVDA, they are based on controllers configuration. The solution extension CD brings solutions oriented TVDA's to SoMachine.

SoMachine characteristics

Overview	
IEC 61131-3 programming languages	■ IL (Instruction List) ■ LD (Ladder Diagram) ■ SFC (Sequential Function Chart) ■ ST (Structured Text) ■ FBD (Function Block Diagram) ■ CFC (Continous Function Chart)
Controller programming services	■ Multi-tasking: Mast, Fast, Event ■ Functions (Func) and Function Blocks (FBs) ■ Data Unit Type (DUTs) ■ On-line changes ■ Watch windows ■ Graphical monitoring of variables (trace) ■ Breakpoints, step-by-step execution ■ Simulation ■ Visualization for application and machine set-up
HMI-based services	■ Graphics libraries containing more than 4000 2D and 3D objects. ■ Simple drawing objects (points, line, rectangles, ellipses, etc …) ■ Preconfigured objects (button, switch, bar graph, etc …) ■ Recipes (32 groups of 256 recipes with max. 1024 ingredients) ■ Action tables ■ Alarms ■ Printing ■ Java scripts ■ Multimedia file support: wav, png, jpg, emf, bmp ■ Variable trending
Motion services	■ Embeded devices configuration and commissioning ■ CAM profile editor ■ Sample application trace ■ Motion and drive function blocks libraries for inverters, servos and steppers ■ Visualization screens
Global services	■ User access and profile ■ Project documentation printing ■ Project comparison (control) ■ Variable sharing based on publish/subscribe mechanism ■ Library version management
Integrated fieldbus configurators	■ Control network: □ Modbus Serial Line □ Modbus TCP ■ Field bus: □ CANopen □ CANmotion □ AS-interface ■ Connectivity: □ Profibus-DP □ Ethernet IP
Expert and solutions libraries	■ PLCopen function blocks for Motion control □ Exemple: MC_MoveAbsolute, MC_CamIn, ServoDrive, ... ■ Packaging function blocks □ Exemple: Analog film tension control, rotary knife, lateral film position control, ... ■ Conveying function blocks □ Exemple: tracking, turntable, conveyor , ... ■ Hoisting function blocks □ Exemple: anti-sway, anti-crab, hoisting position synchronisation, ...

Product offer

SoMachine software is delivered on a DVD, it is a product oriented version that includes all SoMachine features related to generic hardware (M238, M258, XBT GC), as well as generic TVDA

The solution features are added to SoMachine by installing its solution extension CD. It includes all SoMachine solutions hardware, plus all the dedicated application libraries and TVDA.

References

- SoMachine is available in 6 languages:
  - English
  - French
  - German
  - Italian
  - Spanish
  - Simplified Chinese.

- System Requirements:
  - Processor: Pentium 3 -1.2 GHz or higher
  - RAM Memory: 2 GByte; recommended: 3 GByte
  - Hard Disk: 3.5 GB, recommended: 4 GB
  - OS: Windows XP Professional, Windows Vista 32 Bit
  - Drive: DVD reader
  - Display: 1024 × 786 pixel resolution or higher
  - Peripherals: a Mouse or compatible pointing device
  - Peripherals: USB interface
  - Web Access: Web registration requires Internet access

- The documentation is supplied in electronic format: complete on-line help plus pdf version.

SoMachine software

Supported controllers	TVDA	Reference	Weight kg
M238 M258 XBT GC	Optimized HW XBT GC Optimized HW M238 Optimized CANopen M238 Optimized AS-Interface M238 Optimized CANopen XBT GC/GT/GK Performance HW M258 Performance CANopen M258	**MSD CHNSFUV20**	–

SoMachine solution extension

Added controllers	Added TVDA	Added libraries	Reference	Weight kg
M238S M258S LMC 058 XBT GCS XBT GT/GK with control Altivar IMC	Optimized CANopen Altivar IMC Performance CANmotion LMC058 Hoisting Optimized CANopen M238 Conveying Performance CANmotion LMC058	Hoisting Conveying Packaging	**MSD CHNSFUS0V20** *(1)*	–

(1) For this version, please contact Schneider electric.

Modicon M238 logic controller

Connection interfaces

Modicon Telefast ABE 7 pre-wired system
Connection sub-bases for discrete I/O extension modules

Applications	Passive connection sub-bases			Output adapter base
	Inputs	Outputs		

Compatibility	I/O extension modules of Modicon M238/Modicon OTB equipped with HE 10 connectors **TM2 DDI 16DTK/32DTK** and **TM2 DDO 16DTK/32DTK**			
Relay amplification	–			Electromechanical, fixed
Control voltage	⎓ 24 V			
Output voltage	⎓ 24 V			⎓ 5…30 V, ∼ 250 V (electromechanical)
Current per channel – Input	5 mA	–		–
Current per channel – Output	–	0.1 A		3 A
Modularity	16 inputs	16 outputs		
Type of inputs/outputs	16 inputs (1 common/16 channels)	16 outputs (1 common/16 channels)	16 outputs with fuse protection LED indication	16 relay outputs (electromechanical) 1 N/O (1 common/4 channels)
Number of terminals per channel	2, 3 (with optional snap-on terminal block)			
Connection to Twido programmable controller	HE 10 connector, 20-way			
Type of terminal	Fixed screw terminal block			
Interface type	**ABE 7E16EPN20**	**ABE 7E16SPN20**	**ABE 7E16SPN22**	**ABE 7E16SRM20**
Pages	78	78	78	78

Modicon M238 logic controller

Connection interfaces

Modicon Telefast ABE 7 pre-wired system
Connection sub-bases for discrete I/O extension modules

Presentation

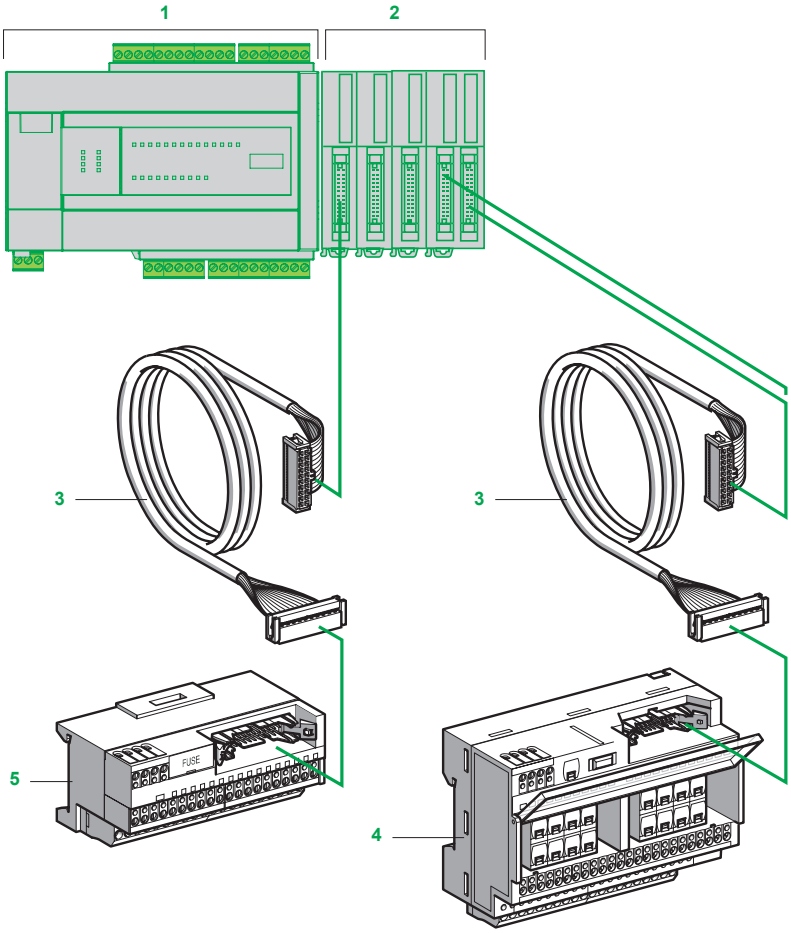

1 Modicon M238 base controller.
2 Discrete I/O modules with 20-way HE 10 connectors. The modular sizes available are 16 or 32 I/O.
3 Cable (**ABF T20E●●0**) equipped with a 20-way HE 10 connector at each end. This cable is available in 0.5, 1, 2 and 3 m lengths (AWG 28/0.08 mm²).
4 16 channel sub-base (**ABE 7E16SPN22** or **ABE 7E16SRM20**) for output extension modules.
5 16 channel sub-base (**ABE 7E16EPN20** or **ABE 7E16SPN20**) for input or output extension modules.

Compatibility with I/O extension modules

		Discrete I/O expention modules	
		Inputs	Outputs (source)
		TM2 DDI 16DK (16 inputs) **TM2 DDI 32DK** (32 inputs)	**TM2 DDO 16TK** (16 outputs) **TM2 DDO 32TK** (32 outputs)
Terminal block types		HE 10 connectors, 20-ways	
Connection to I/O extension modules		**ABF T20E●●0** (HE 10, 20-ways)	
Passive connection sub-bases			
16 channels	**ABE 7E16EPN20**	■	
	ABE 7E16SPN2●		■
Output adapter bases			
16 channels	**ABE 7E16SRM20**		■

■ Compatible

Modicon M238 logic controller

Connection interfaces

Modicon Telefast ABE 7 pre-wired system
Connection sub-bases for
discrete I/O extension modules

Environment characteristics

			ABE 7E16•PN20	ABE 7E16SPN2/SRM20
Product certifications			UL, CSA	
Degree of protection	Conforming to IEC 60529		IP 2X	
Protective treatment			"TC"	
Resistance to incandescent wire	Conforming to IEC 60695-2-11	**°C**	750 : extinction < 30 s	
Shock resistance	Conforming to IEC 60068-2-27	**ms**	11 (half sine wave) 15 gn (acceleration)	
Vibration resistance	Conforming to IEC 60068-2-6	**Hz**	10…150 2 gn (acceleration)	
Resistance to electrostatic discharge	Conforming to IEC 61000-4-2		Level 3	
Resistance to radiated fields	Conforming to IEC 61000-4-3	**V/m**	10 (80 MHz à 2 GHz), level 3	
Immunity to fast transient currents	Conforming to IEC 61000-4-4		Level 3	
Surge withstand	Conforming to IEC 61000-4-5	**µs**	1,2/50 - 8/20	
Ambient air temperature	Conforming to IEC 61131-2	**°C**	Operation: - 5…+ 60	
		°C	Storage : - 40…+ 80	
Dielectric test voltage (for 1 minute)		**kV**	2 between terminals and mounting rails	
Overvoltage category	Conforming to IEC 60664-1		Category II	
Degree of pollution	Conforming to IEC 60664-1		2	
Mounting	Conforming to IEC 60715		On standard ⎍ rail, height 15 mm, width 35 mm	
Connection	Flexible cable without cable end	**mm²**	1 x 0.14…2.5, AWG 1 x 26…14	–
	Flexible cable with cable end	**mm²**	1 x 0.09…1.5, AWG 1 x 28…16	2 x 0.09…0.75, AWG 2 x 28…20
	Solid cable	**mm²**	1 x 0.14…2.5, AWG 1 x 26…12	2 x 0.12…1.5, AWG 2 x 28…16
Tightening torque		**Nm**	0.6 (with 3.5 mm flat screwdriver)	

Supply characteristics (controller side)

Supply voltage	Conforming to IEC 61131-2	⎓ **V**	19…30 (Un = 24)
Maximum supply current per sub-base		⎓ **A**	2
Voltage drop on supply fuse		⎓ **V**	0.3
Supply overload and short-circuit protection		**A**	2 by quick-blow fuse (included)

Characteristics of the control circuit for 1 channel (sensor/controller side)

Sub-base type			**Passive connection sub-bases for discrete signals**		**Connection sub-bases with soldered relays**
			ABE 7 E16EPN20	**ABE 7 E16SPN2•**	**ABE 7 E16SRM20**
Number of channels			16 inputs	16 outputs	16 relay outputs
Rated voltage Ue		⎓ **V**	24		
Min/max voltage	Conforming to IEC 61131-2	⎓ **V**	20.4/26.4	20,4/28,8	19/30
Courant interne par voie à Ue		**mA**	–	3,2 for ABE 7E16SPN22	9
Etat 1 garanti	Relay output	**V**	–		16.8
Etat 0 garanti	Relay output	**V**	–		2
Conformité	Conforming to IEC 61131-2		Type 1	–	

Output circuit characteristics (preactuator side)

Number of channels	Passive output		–	16	–
	Relay output		–	–	16
Contact arrangement			–		1 N/O relay
Rated voltage at Ue	Passive output	⎓ **V**	24		–
	Relay output	⎓ **V**	–		5…30
		∿ **V**	–		110…250
Current switched per I/O channel	Entrée/Passive output	**mA**	15/–	–/100	–
	Relay output	**A**	–		3
Maximum current per common	Passive output	**A**	–	1.6	–
	Relay output	**A**	–		5
Rated operational current (60 °C max) (for 500 000 operations)	DC 12	**A**	–		–/3
	DC 13	**A**	–		–/0.5
	AC 12, relay	**A**	–		2
	AC 15, relay	**A**	–		0.4
Minimum current		**mA**	–		–/100
Rated insulation voltage		**V**	Not isolated		300
Maximum response time	From state 1 to state 0 Relay output	**ms**	–		5
	From state 1 to state 0 Relay output	**ms**	–		2.5
Channel fuse protection		**mA**	–	125 for ABE 7E16SPN22	–

Other characteristics (at ambient temperature of 20 °C)

Permissible leakage current without illuminating the channel LED		**mA**	–	1.5 for ABE 7E16SPN22	–
Rated impulse withstand voltage (1.2/50)	Relay output	**kV**	–		6
Switching frequency	Relay output	**Hz**	–		20
Mechanical durability	In millions of operating cycles		–		20

Curves for determining the lenght of cable

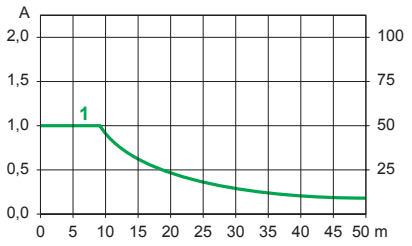

1 Cables ABF T2●●●●● c.s.a. 0.08 mm² (AWG 28)

Temperature derating curves

ABE 7E11SRM20, ABE 7E16SRM20

6 electromechanical relay outputs

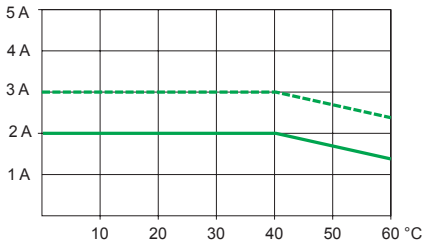

100 % of channels used
50 % of channels used

Electrical durability (in millions of operating cycles, conforming to IEC 60947-5-1)

ABE 7E16SRM20

d.c. loads

DC 12 curves *(1)*

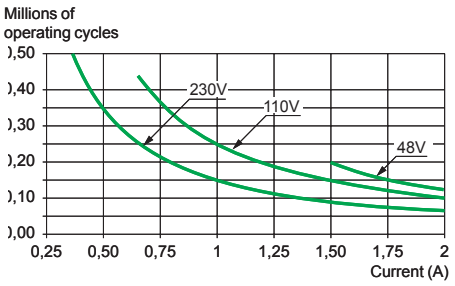

DC 13 curves *(2)*

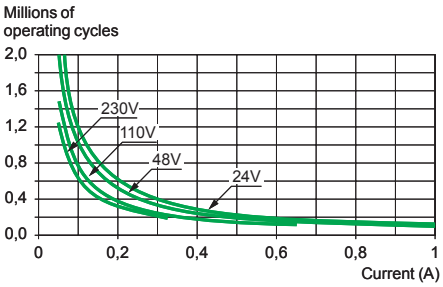

a.c. loads

AC 12 curves *(3)*

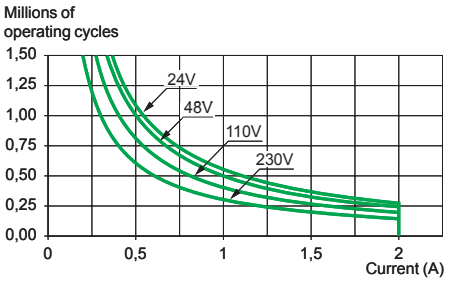

AC 14 curves *(4)*

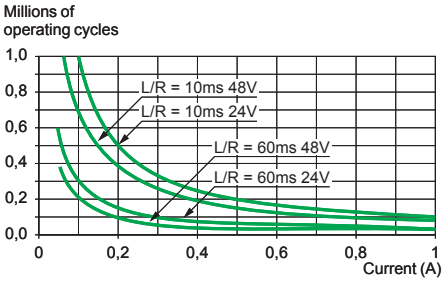

AC 15 curves *(5)*

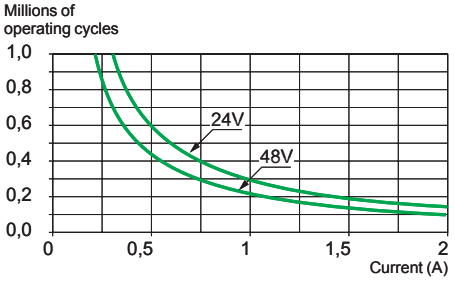

(1) DC 12: control of resistive loads and of solid state loads isolated by optocoupler, L/R ≤ 1 ms.
(2) DC 13: control of electromagnets, L/R ≤ 2 x (Ue x Ie) in ms, Ue: Rated operational voltage, Ie: rated operational current (with a protective diode on the load, DC12 curves must be used with a coefficient of 0.9 applied to the number in millions of operating cycles)
(3) AC 12: control of resistive loads and of solid state loads isolated by optocoupler, cos φ ≤ 0.9.
(4) AC 14: control of small electromagnetic loads ≤72 VA, make: cos φ = 0.3, break: cos φ = 0.3.
(5) AC 15: control of electromagnetic loads > 72 VA, make: cos φ = 0.7, break: cos φ = 0.4.

Modicon M238 logic controller

Connection interfaces

Modicon Telefast ABE 7 pre-wired system
Connection sub-bases for discrete I/O extension modules

ABE 7E16EPN20

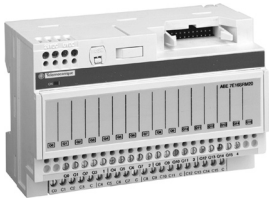

ABE 7E16SRM20

References

For discrete I/O expention modules

Number of inputs	Type of inputs	Compatibility	LED per channel	Fuse channel	Reference	Weight kg
16	Sink ⎓ 24 V	TM2 DDI16DK/DDI32DK	No	No	**ABE 7E16EPN20**	0.430

Number of outputs	Type of outputs	Compatibility	LED per channel	Fuse channel	Reference	Weight kg
16	Source ⎓ 24 V	TM2 DDO16TK/DDO32TK	No	No	**ABE 7E16SPN20**	0.450
			Yes	Yes	**ABE 7E16SPN22**	0.450
	Relais ⎓ 24/∿ 250 V, 3 A	TM2 DDO16TK/DDO32TK	No	No	**ABE 7E16SRM20**	0.430

Connection cordset for discrete I/O expention modules

Type of signal	Compatibility	Type of connection: TM2 side	Type of connection: Telefast side	Gauge/ C.s.a.	Length (1)	Reference	Weight kg
Discrete inputs/ outputs	TM2 DDI16DK/ DDI32DK/ DDO16TK/ DDO32TK	HE 10 20-ways	HE 10 20-ways	AWG 28 0.08 mm²	0,5 m	**ABF T20E050**	0.060
					1 m	**ABF T20E100**	0.080
					2 m	**ABF T20E200**	0.140

Accessories

Description	Number of shunted terminals	Characteristics	Sold in lots of	Unit reference	Weight kg
Optional snap-on terminal blocks	20	–	5	**ABE 7BV20**	0.060
	12 + 8	–	5	**ABE 7BV20TB**	0.060
Quick-blow fuses for ABE 7E16SPN22 sub-bases 5 x 20, 250 V, UL	–	0.125 A	10	**ABE 7FU012**	0.010
		0.315 A	10	**ABE 7FU030**	0.010
		1 A	10	**ABE 7FU100**	0.010
		2 A	10	**ABE 7FU200**	0.010

(1) For lengths > 2 m, please contact us.

Presentation: page 75
Compatibility: page 75
Characteristics: page 76
Dimensions: page 79
Schemes: pages 80 …

References (continued)

Separate for connection components

Description	Type	Compatibility	Reference	Weight kg
Connectors Sold in lots of 5	HE 10 female 20-ways	TM2 DDI16DK/32DK/ DDO16TK/32TK	**TWD FCN2K20**	–
Screw terminal blocks Sold in lots of 2	10-ways	TM2 DDI●DT/DAI8DT/ DDO8●T/DRA●RT	**TWD FBT2T10**	–
	11-ways	TM2 DMM8DRT/AMI●●T/ARI8HT	**TWD FTB2T11**	–

Type of signal	Compatibility	Type of connection		Gauge/ C.s.a.	Length (1)	Reference	Weight kg
		TM2 side	Other side				
Cables for discrete I/O	TM2 DDI16DK/32DK/ DDO16TK/32TK	HE 10 20-ways	Bare wires	AWG 22 0.035 mm²	3 m	**TWD FCW30K**	0.405
					5 m	**TWD FCW50K**	0.670
Pre-formed cable, rolled	20 conducteurs	–	–	AWG 28 0.08 mm²	20 m	**ABF C20R200**	1.310

Dimensions

ABE 7E16SPN22, ABE 7E16SRM20

Mounting on 35 mm ⊥⊔ rail or screw fixing (retractable lugs)

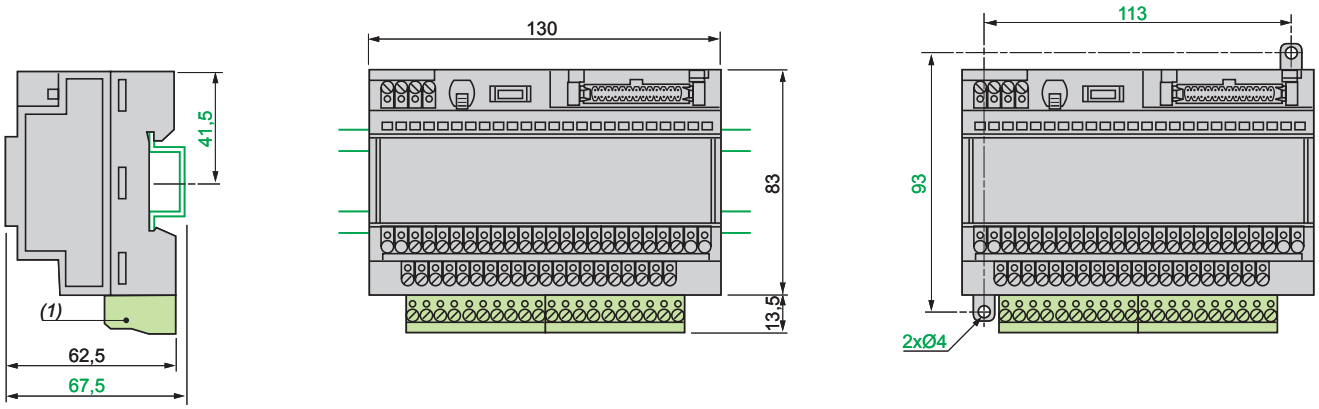

(1) ABE 7BV20, ABE 7BV20TB.

ABE 7E16EPN20, ABE 7E16SPN20

Mounting on 35 mm ⊥⊔ rail

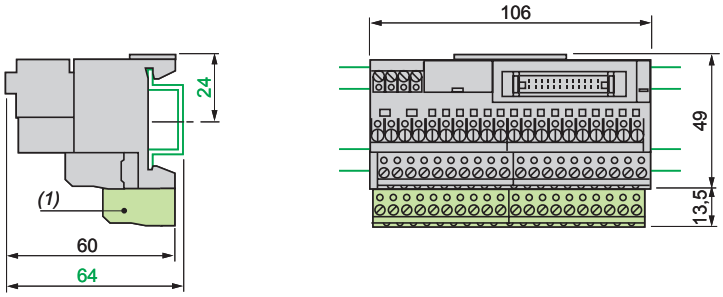

(1) ABE 7BV20, ABE 7BV20TB.

Modicon M238 logic controller

Connection interfaces

Modicon Telefast ABE 7 pre-wired system
Connection sub-bases for
discrete I/O extension modules

ABE 7E16EPN20

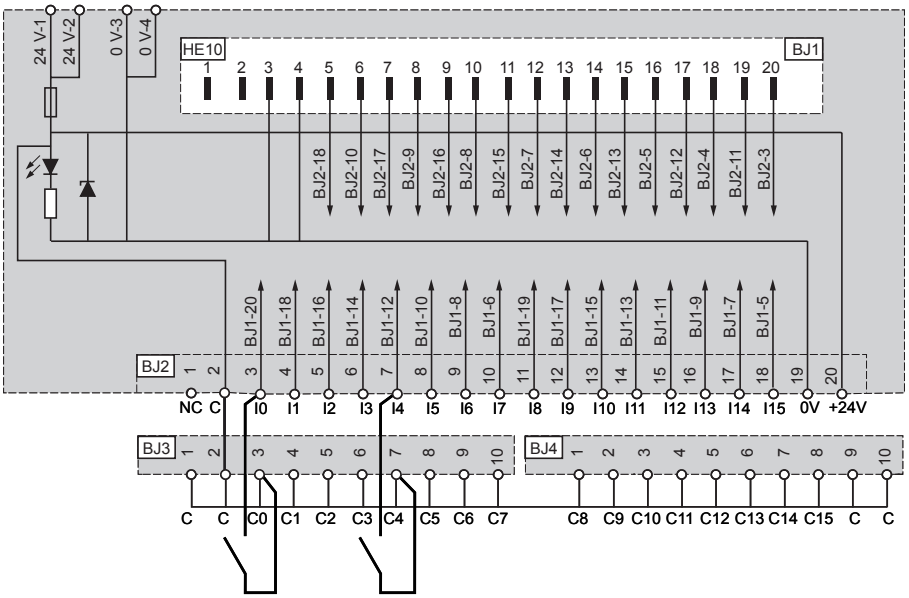

HE10, 20-way

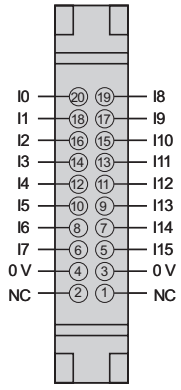

BJ1

ABE 7E16SPN22

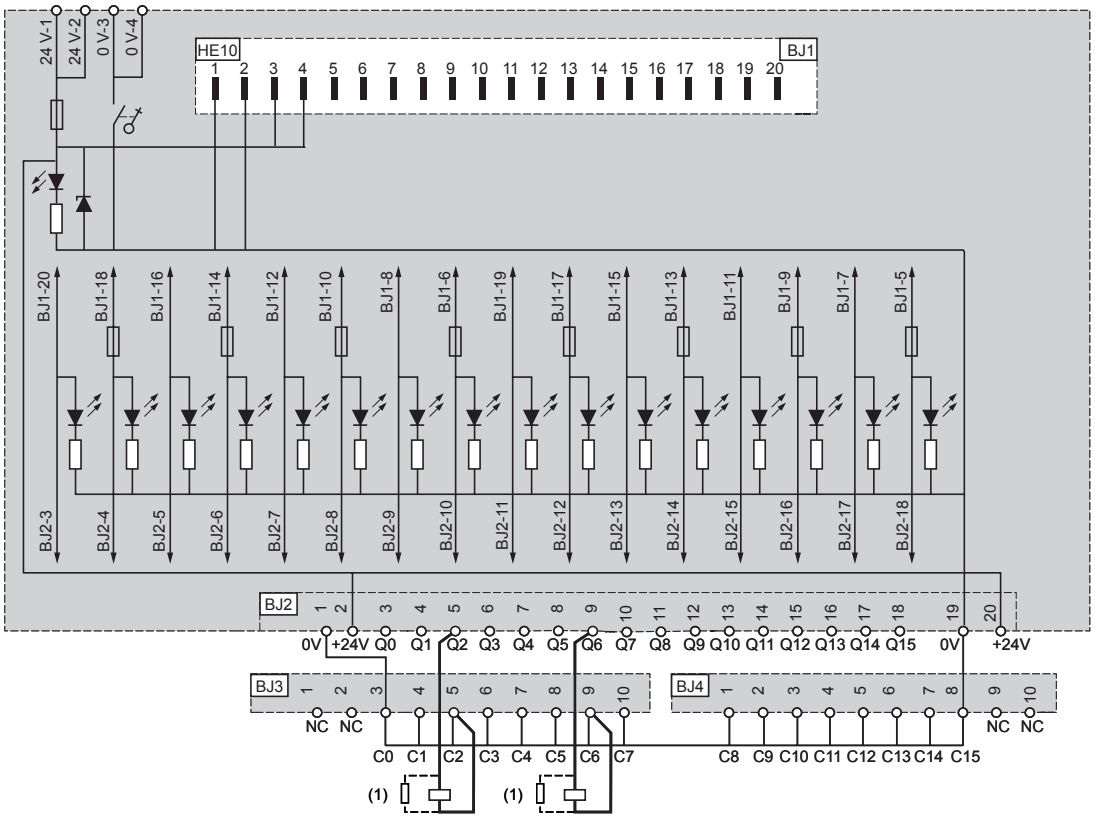

HE10, 20-way

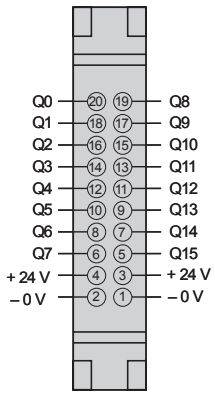

BJ1

(1) Example of output connections.
When connecting an inductive load, include a diode or a varistor.

ABE 7E16SPN20

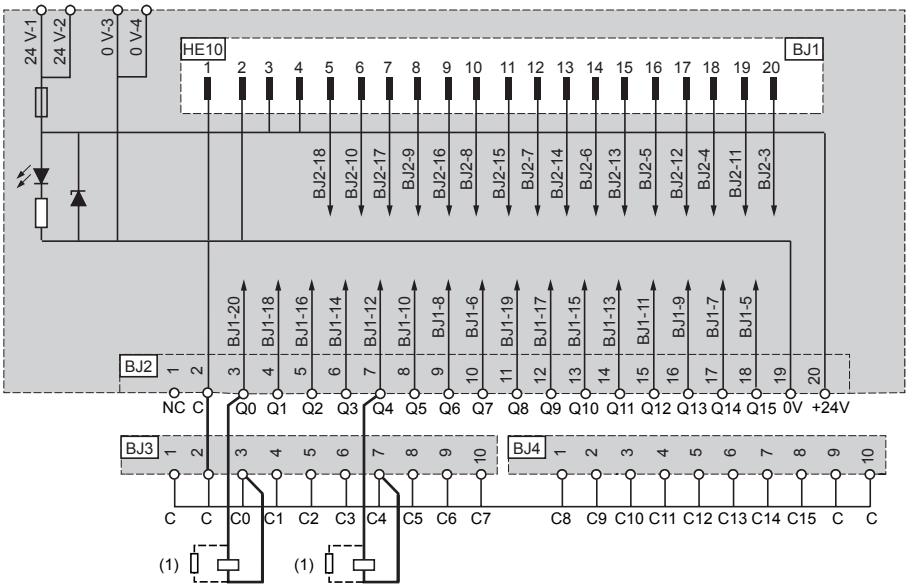

HE10, 20-way

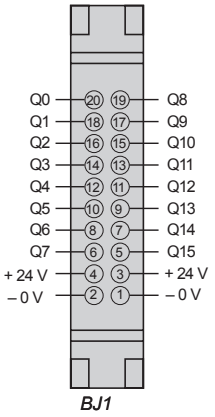

ABE 7E16SRM20

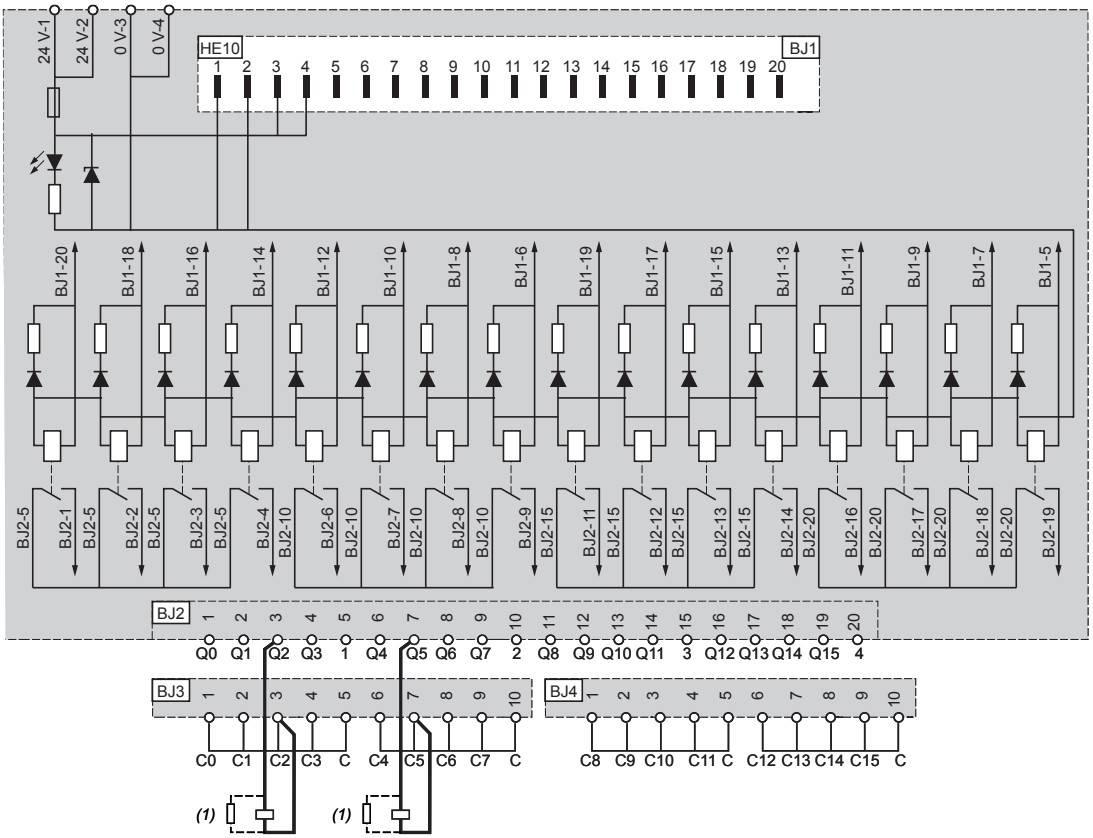

HE10, 20-way

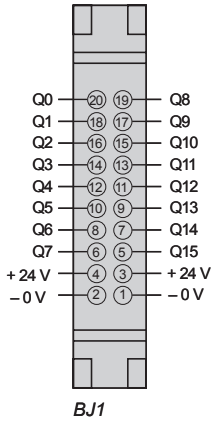

(1) Example of output connections.
When connecting an inductive load, include a diode or a varistor.

Modicon M238 logic controller

Discrete inputs modules and OsiSense® XS inductive proximity sensors

Temporary version

OsiSense® XS inductive proximity sensors			Logic controller		I/O extension modules
			TM238 LDD24DT, TM238 LDA24DR, TM238 LFDC24DT, TM238 LFAC24DR		TM2 DDI8DT
			6 standard inputs	8 HSC inputs	8 inputs
			24 VCC Sink/Source	24 VCC Sink	24 VCC Sink/Source
			Type 1	Type 1	Type 1
2 wires	∼	**XS1●●BLFA**			
		XS7/8 C40FP			
	⎓	**XS7 J/F**			
		XS7 C/D/E			
		XS5 D/C A/B			
		XS7 T4DA			
	∼/ ⎓	**XS8 C/D/E**			
		XS1/2 M●●M			
		XS6●●B1/B4M			
		XS2●●S/AMA			
		XS4 230			
		XSAV●V1●801			
		XS7/8 C40M			
		XS7/8G12MA			
3 wires	PNP	**XS8 C/D/E A1P**			
		XS7 C/D/E/J/F A1P			
		XS1 P 349			
		XS5 B1P			
		XS4 P 340			
		XS2●●S/AAP●			
		XS1/2 N06 P			
		XS1/2 L/N 04/05 P			
		XS6●●B1/4P			
		XS4 P 370			
		XS6 B2P			
		XS1/2●●A/BLP			
		XS1/208A/BLP			
		XS1 M18PAS4/20			
		XSAV1●373			
		XS7/8 G12P 140			
4 wires NO + NC	PNP	**XS7/8 G12P 440**			
		XS7/8 C40P 440/9			
		XS1/2 L/M/N P 410			
3 wires	NPN	**XS8 C/D/E A1N**			
		XS7 C/D/E/J/F A1N			
		XS1 N 349			
		XS5 B1N			
		XS4 N 340			
		XS2●●S/AAN●			
		XS1/2 N06 N			
		XS1/2 L/N 04/05 N			
		XS6●●B1/4N			
		XS4 N 370			
		XS6 B2N			
		XS1/2●●A/BLN			
		XS1/208A/BLN			
		XS7/8 G12N 140			
4 wires NO + NC	NPN	**XS7/8 G12N 440**			
		XS7/8 C40N 440/9			
		XS1/2 L/M/N N 410			
4 wires prog. NO/NC	PNP + NPN	**XS1/2 M ●●KP**			
	PNP + NPN Factor 1	**XS KP M40**			

Compatible

Non compatible

						Counter modules
TM2 DAI8DT	**TM2 DDI16DT**	**TM2 DDI16DK**	**TM2 DDI32DK**	**TM2 DMM8DRT**	**TM2 DMM24DRF**	**TM200 HSC 206DT/DF**
8 inputs	16 inputs	16 HE10 inputs	32 HE10 inputs	4 inputs	16 spring terminal inputs	3 fast inputs
120 VAC	24 VCC Sink/Source	24 VCC Sink/Source	24 VCC Sink/Source	24 VCC Sink/Source	24 VCC Sink/Source	24 VCC Sink
Type 1	Type 1	Type 1	Type 1	Type 1	Type 1	Type 1

Modicon M238 logic controller

Discrete inputs modules and OsiSense® XU photo-electric sensors

Temporary version

OsiSense® XU photo-electric sensors			Logic controller		I/O extension modules
			TM238 LDD24DT, TM238 LDA24DR, TM238 LFDC24DT, TM238 LFAC24DR		TM2 DDI8DT
			6 standard inputs	8 HSC inputs	8 inputs
			24 VCC Sink/Source	24 VCC Sink	24 VCC Sink/Source
			Type 1	Type 1	Type 1
2 wires solid-state output	∼/ ⎓	XULA			
		XU2/5/8/9M			
3 wires	PNP	XUB0/1/2/4/5/9/ P S			
		XUM 1/5/6/9 P			
		XUK 1/2/5/9 P			
		XUX 1/2/5/9 P			
		XUB0/1/2/4/5/9/ P S			
		XUM2 P			
		XUM●A●PCN●●			
		XUM●B●●PN●●			
		XUM0 P			
		XUD A●P			
		XULH			
		XUAH			
		XUBT P			
		XU1/9/5N18P●			
		XU2P●●DL			
		XU2N18P●			
		XUVH			
		XUKC1P			
		XURC3/4P			
		XUKR1P			
		XU5M18U1			
		XUY LCCLAR●●P			
		XUY B/P ●●CO P			
3 wires	NPN	XUB0/1/2/4/5/9/ N S			
		XUM1/5/6/9 N			
		XUK1/2/5/9 N			
		XUX1/2/5/9 N			
		XUM2 N			
		XUM●A●NCN●●			
		XUM●B●●N N●●			
		XUM0 N			
		XUD A●N			
		XULJ			
		XUAJ			
		XUBT N			
		XU1/9/5N18N●			
		XU2N18N●			
		XUVJ			
		XUKC1N			
		XURC3/4N			
		XUKR1N			
		XUY LCCLAR●●N			
		XUY B/P ●●CO N			
3 wires	PNP/NPN	XUC9/8AK			
		XUK8AK			
		XUC2AK			
		XUK0AKS			
		XUX0AKS			
		XUKT1K			
		XURU1			
		XURK0			
		XURK1			
		XUY PS			
		XUY P 952/4 S			
4 wires	PNP + NPN	XUMW1K			
		XUY FAL/P/V			
		XUY F			
		XUVF 30/60			
		XUV/Y F 120/180/250			
		XUVK			

Compatible

Non compatible

						Counter modules
TM2 DAI8DT	**TM2 DDI16DT**	**TM2 DDI16DK**	**TM2 DDI32DK**	**TM2 DMM8DRT**	**TM2 DMM24DRF**	**TM200 HSC 206DT/DF**
8 inputs	16 inputs	16 HE10 inputs	32 HE10 inputs	4 inputs	16 spring terminal inputs	3 fast inputs
120 VAC	24 VCC Sink/Source	24 VCC Sink/Source	24 VCC Sink/Source	24 VCC Sink/Source	24 VCC Sink/Source	24 VCC Sink
Type 1	Type 1	Type 1	Type 1	Type 1	Type 1	Type 1

Modicon M238 logic controller

Discrete inputs modules and OsiSense® XG rotary encoders

Temporary version

OsiSense® XG rotary encoders			Logic controller		I/O extension modules
			TM238 LDD24DT, TM238 LDA24DR, TM238 LFDC24DT, TM238 LFAC24DR		TM2 DDI8DT
			6 standard inputs	8 HSC inputs	8 inputs
			24 VCC Sink/Source	24 VCC Sink	24 VCC Sink/Source
			Type 1	Type 1	Type 1
Incremental encoders	5V, RS 422	**XCC 14●●●●●R**		RS 422 (5 V)	
	Push/pull 11…30 V	**XCC 14●●●●●K**			
	5V, RS 422	**XCC 19●●●●●RN**		RS 422 (5 V)	
	Push/pull 11…30 V	**XCC 19●●●●●KN**			
	5V, RS 422	**XCC 15●●●●●X**		RS 422 (5 V)	
	Push/pull 11…30 V	**XCC 15●●●●●Y**			
	5V, RS 422	**XCC 15●●●●M●●●X**		RS 422 (5 V)	
	Push/pull 11…30V	**XCC 15●●●●M●●●Y**			
Absolute encoders	Push/pull 11…30 V	**XCC 25●●●●KB (N) / KG (N)**			
	SSI output without parity, clock 13 or 25 bits	**XCC 25●●●●SB (N) / SG (N)**		SSI	
	Push/pull 11…30 V	**XCC 29●●●●KB (N) / KG (N)**			
	SSI output without parity, clock 13 or 25 bits	**XCC 29●●●●SB (N) / SG (N)**		SSI	
	SSI output without parity, clock 13 or 25 bits	**XCC 35●●●●SB (N) / SG (N)**		SSI	
		XCC 39●●●●SB (N) / SG (N)		SSI	
	11…30 V, CanOpen	**XCC 35●●●●CB**		(CanOpen)	
	11…30 V, Profibus	**XCC 35●●●●FB**		(Profibus)	

Compatible

Non compatible

Compatible with ⎓ 100 Hz max. frequency

						Counter modules
TM2 DAI8DT	**TM2 DDI16DT**	**TM2 DDI16DK**	**TM2 DDI32DK**	**TM2 DMM8DRT**	**TM2 DMM24DRF**	**TM200 HSC 206DT/DF**
8 inputs	16 inputs	16 HE10 inputs	32 HE10 inputs	4 inputs	16 spring terminal inputs	3 high-speed inputs
120 VAC	24 VCC Sink/Source	24 VCC Sink/Source	24 VCC Sink/Source	24 VCC Sink/Source	24 VCC Sink/Source	24 VCC Sink
Type 1	Type 1	Type 1	Type 1	Type 1	Type 1	Type 1
						RS 422 (5 V)
						RS 422 (5 V)
						RS 422 (5 V)
						RS 422 (5 V)
						SSI
						SSI
						SSI
						SSI
						(CanOpen)
						(Profibus)

Modicon M238 logic controller

Operator dialogue terminals

Magelis Small Panels

Applications		**Display of text messages**
Type of terminal		**Small Panels with keypad**

Display	Type	Green back-lit LCD, height 5.5 mm or Green, orange or red back-lit LCD, height 4.34…17.36 mm
	Capacity	2 lines of 20 characters or 1 to 4 lines of 5 to 20 characters
Data entry		Via keypad with 8 keys (4 customisable)
Memory capacity	Application	512 KB Flash
	Expansion by PCMCIA type II	–
Functions	Maximum number of pages	128/200 application pages 256 alarm pages
	Variables per page	40…50
	Representation of variables	Alphanumeric
	Recipes	–
	Curves	–
	Alarm logs	Depending on model
	Real-time clock	Access to the PLC real-time clock
	Alarm relay	–
	Buzzer	–
Communication	Asynchronous serial link	RS 232C/RS 485
	Downloadable protocols	Uni-TE, Modbus and for PLC brands : Allen-Bradley, Omron, Mitsubishi, Siemens
	Printer link	RS 232C serial link *(2)*
Development software		Vijeo Designer Lite (on Windows XP and Vista)
Operating system		Magelis
Terminal type		**XBT N**
Pages		Please, consult our catalogue “Human/Machine interfaces”

(1) Only XBT RT511.
(2) Depending on model.

Display of text messages Control and parametering of data	Display of text messages and/or semi-graphics Control and parametering of data	
Small Panels with keypad	**Small Panels with touch screen and keypad**	
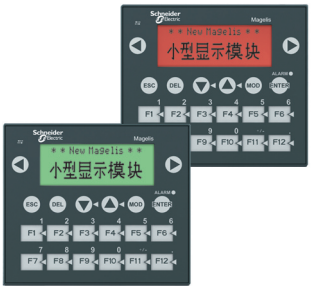	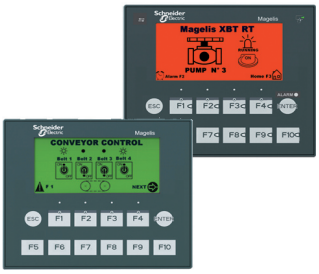	
Green, orange or red back-lit LCD, height 4.34…17.36 mm	Green, orange or red back-lit LCD (198 x 80 pixels), height 4…16 mm	
1 to 4 lines of 5 to 20 characters	2 to 10 lines of 5 to 33 characters	
Via keypad with 12 function keys or numeric entry (depending on context) + 8 service keys	Via keypad with 4 function keys 8 service keys	Via touch screen and keypad with 10 function keys 2 service keys
512 KB Flash	512 KB Flash EPROM	
–	–	
128/200 application pages 256 alarm pages	200 application pages 256 alarm pages	
40…50	50	
Alphanumeric	Alphanumeric, bargraph, buttons, lights	
–	–	
–	Yes	
Yes	Yes	
Access to the PLC real-time clock		
–		
–	Yes *(1)*	
RS 232C/RS 485		
Uni-TE, Modbus and for PLC brands : Allen-Bradley, Omron, Mitsubishi, Siemens		
RS 232C serial link *(2)*		
Vijeo Designer Lite (on Windows XP and Vista)		
Magelis		
XBT R	**XBT RT**	
Please, consult our catalogue “Human/Machine interfaces”		

Modicon M238 logic controller

Operator dialogue terminals
Magelis Advanced Panels XBT GT, XBT GK, XBT GH and XBT GTW

Applications		**Display of text messages, graphic objects and synoptic views** **Control and parametering of data**		
Type of terminal		**Touch screen Advanced Panels**		
			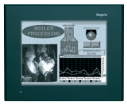	
Display	Type	Back-lit monochrome (amber or red mode) STN LCD (320 x 240 pixels) or TFT LCD	Back-lit monochrome or colour STN LCD or back-lit colour TFT LCD (320 x 240 pixels)	Back-lit colour STN LCD or TFT LCD (640 x 480 pixels)
	Size	3.8" (monochrome or colour)	5.7" (monochrome or colour)	7.5" (colour)
Data entry		Via touch screen		
	Static function keys	–		
	Dynamic function keys	–		
	Service keys	–		
	Alphanumeric keys	–		
Memory capacity	Application	32 MB Flash EPROM	16 MB Flash EPROM	32 MB Flash EPROM
	Expansion	–	By 128, 256, 512 MB, 1, 2 or 4 GB CF card (except XBT GT2110)	
Functions	Maximum number of pages	Limited by internal Flash EPROM memory capacity	Limited by internal Flash EPROM memory capacity or CF card memory capacity	
	Variables per page	Unlimited (8000 variables max.)		
	Representation of variables	Alphanumeric, bitmap, bargraph, gauge, tank, tank level indicator, curves, polygon, button, light		
	Recipes	32 groups of 64 recipes comprising 1024 ingredients max.		
	Curves	Yes, with log		
	Alarm logs	Yes		
	Real-time clock	Built-in		
	Digital inputs/outputs	–		1 input (reset) and 3 outputs (alarm, buzzer, run)
	Multimedia inputs/outputs	–		1 audio input (microphone), 1 composite video input (digital or analogue camera), 1 audio output (loudspeaker) *(1)*
Communication	Downloadable protocols	Uni-TE *(2)*, Modbus, Modbus TCP/IP *(1)* and for PLC brands: Mitsubishi, Omron, Allen-Bradley and Siemens		
	Asynchronous serial link	RS 232C/RS 485 (COM1)	RS 232C/RS 422/485 (COM1) and RS 485 (COM2)	
	USB ports	1	1	2
	Bus and networks	–	Modbus Plus and Fipway with USB gateway, Profibus DP and Device Net with optional card	
		Ethernet TCP/IP (10BASE-T/100BASE-TX) *(1)*		
	Printer link	USB port for parallel printer	RS 232C (COM1) serial link, USB port for parallel printer	
Development software		Vijeo Designer (on Windows XP and Vista)		
Operating system		Magelis (200 MHz RISC CPU)	Magelis (133 MHz RISC CPU)	Magelis (266 MHz RISC CPU)
Terminal type		**XBT GT11/13**	**XBT GT21/22/23**	**XBT GT42/43**
Pages		Please, consult our catalogue “Human/Machine interfaces”		

(1) Depending on model.
(2) Uni-TE version V2 for Twido controller and TSX Micro/Premium platform.

Touch screen Advanced Panels

Back-lit colour STN LCD or TFT LCD (640 x 480 pixels)	Back-lit colour TFT LCD (800 x 600 pixels)	Back-lit colour TFT LCD (1024 x 768 pixels)
10.4" (colour)	12.1" (colour)	15" (colour)
Via touch screen		
–		
–		
–		
–		
32 MB Flash EPROM		
By 128, 256, 512 MB, 1, 2 or 4 GB Compact Flash card		
Limited by internal Flash EPROM memory capacity or CF card memory capacity		
Unlimited (8000 variables max.)		
Alphanumeric, bitmap, bargraph, gauge, tank, tank level indicator, curves, polygon, button, light		
32 groups of 64 recipes comprising 1024 ingredients max.		
Yes, with log		
Yes		
Built-in		
1 input (reset) and 3 outputs (alarm, buzzer, run)		
1 audio input (microphone), 1 composite video input (digital or analogue camera), 1 audio output (loudspeaker) *(1)*		
Uni-TE *(2)*, Modbus, Modbus TCP/IP *(1)* and for PLC brands: Mitsubishi, Omron, Allen-Bradley and Siemens		
RS 232C/RS 422/485 (COM1) and RS 485 (COM2)		
2		
Modbus Plus with USB gateway		
Ethernet TCP/IP (10BASE-T/100BASE-TX)		
RS 232C (COM1) serial link, USB port for parallel printer		
Vijeo Designer (on Windows XP and Vista)		
Magelis (266 MHz RISC CPU)		
XBT GT52/53	**XBT GT63**	**XBT GT73**
Please, consult our catalogue “Human/Machine interfaces”		

Modicon M238 logic controller

Operator dialogue terminals

Magelis Advanced Panels XBT GT, XBT GK, XBT GH and XBT GTW

Applications		**Display of text messages, graphic objects and synoptic views** **Control and parametering of data**	
Type of terminal		**Advanced Panels with keypad**	

Display	Type	Colour TFT LCD (320 x 240 pixels) or monochrome STN LCD	Colour TFT LCD (640 x 480 pixels)
	Size	5.7" (monochrome or colour)	10.4" (colour)
Data entry		Via keypad and/or touch screen (configurable) and/or by industrial pointer	
	Static function keys	10	12
	Dynamic function keys	14	18
	Service keys	8	
	Alphanumeric keys	12	
Memory capacity	Application	16 MB Flash EPROM	32 MB Flash EPROM
	Expansion	By 128, 256, 512 MB, 1, 2 or 4 GB Compact Flash card	
Functions	Maximum number of pages	Limited by internal Flash EPROM memory capacity or CF card memory capacity	
	Variables per page	Unlimited (8000 variables max.)	
	Representation of variables	Alphanumeric, bitmap, bargraph, gauge, tank, tank level indicator, curves, polygon, button, light	
	Recipes	32 groups of 64 recipes comprising 1024 ingredients max.	
	Curves	Yes, with log	
	Alarm logs	Yes	
	Real-time clock	Built-in	
	Digital inputs/outputs	–	1 input - 3 outputs
	Multimedia inputs/outputs	–	–
Communication	Downloadable protocols	Uni-TE *(2)*, Modbus, Modbus TCP/IP *(1)* and for PLC brands: Mitsubishi, Omron, Allen-Bradley and Siemens	
	Asynchronous serial link	RS 232C/RS 422/485 (COM1) RS 485 (COM2)	
	USB ports	1	2
	Bus and networks	Modbus Plus, Fipway with USB gateway, Profibus DP and Device Net with optional card	
		Ethernet TCP/IP (10BASE-T/100BASE-TX)	
	Printer link	RS 232C (COM1) serial link, USB port for parallel printer	
Development software		Vijeo Designer (on Windows XP and Vista)	
Operating system		Magelis (266 MHz RISC CPU)	
Terminal type		**XBT GK 21/23**	**XBT GK 53**
Pages		Please, consult our catalogue “Human/Machine interfaces”	

(1) Depending on model.
(2) Uni-TE version V2 for Twido controller and TSX Micro/Premium platform.

Display of text messages, graphic objects and synoptic views Control and parametering of data			
Portable Advanced Panels	**Open touch screen Advanced Panels**		
	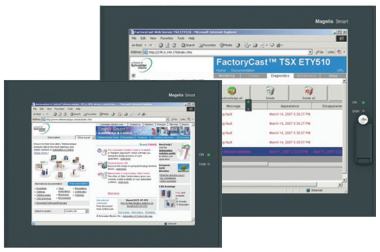		
Colour TFT LCD (640 x 480 pixels)	Colour TFT LCD (800 x 600 pixels)	Colour TFT LCD (800 x 600 pixels)	Colour TFT LCD (1024 x 768 pixels)
5.7" (colour)	8.4" (colour)	12" (colour)	15" (colour)
Via touch screen	Via touch screen		
11	–		
–	–		
–	–		
–	–		
32 MB Flash EPROM	1 GB CF system card included with terminal, expandable to 4 GB	2 GB CF system card included with terminal, expandable to 4 GB	
By 128, 256, 512 MB, 1, 2 or 4 GB Compact Flash card			
Limited by internal Flash EPROM memory capacity or CF card memory capacity			
Unlimited (8000 variables max.)			
Alphanumeric, bitmap, bargraph, gauge, tank, tank level indicator, curves, polygon, button, light			
32 groups of 64 recipes comprising 1024 ingredients max.			
Yes, with log			
Yes			
Built-in			
–			
1 audio output			
Uni-TE *(2)*, Modbus, Modbus TCP/IP and for PLC brands: Mitsubishi, Omron, Rockwell Automation and Siemens	Uni-TE *(2)*, Modbus, Modbus TCP/IP *(1)* and for PLC brands: Mitsubishi, Omron, Allen-Bradley and Siemens		
RS 232C/RS 422-485 (COM1)	RS 232C (COM1) RS 232C (COM2)	RS 232C (COM1)	RS 232C (COM1) RS 232C (COM2)
1	4	4 + 1 front mounted	
–	Modbus Plus with USB gateway		
1 Ethernet port (10BASE-T/100BASE-TX)	1 Ethernet TCP/IP port (10BASE-T/100BASE-TX) and 1 Ethernet port (10BASE-T/100BASE-TX/1 GB)		
–	RS 232C (COM1 or COM2) serial link, USB port for parallel printer		
Vijeo Designer (on Windows XP and Vista)			
Magelis (266 MHz RISC CPU)	Windows XP Embedded		
XBT GH 2460	**XBT GTW 450**	**XBT GTW 652**	**XBT GTW 750**
Please, consult our catalogue “Human/Machine interfaces”			

(1) Depending on model.
(2) Uni-TE version V2 for Twido controller and TSX Micro/Premium platform.

Modicon M238 logic controller

Power supplies for DC control circuits
Phaseo power supplies

Power supplies		Regulated switch mode Phaseo Modular range and Optimum range industrial power supplies			
					
Input voltage		100...240 V ∿ 120...250 V ⎓			
Connection to world-wide line supplies	United States - 120 V (in phase-to-neutral) - 240 V (in phase-to-phase)	Single-phase (N-L1) or 2-phase (L1-L2) connection			
	Europe - 230 V (in phase-to-neutral) - 400 V (in phase-to-phase)	Single-phase (N-L1) connection			
	United States - 277 V (in phase-to-neutral) - 480 V (in phase-to-phase)	–			
IEC 61000-3-2 conformity		Yes for ABL 7RP, not for ABL 8REM and not applicable for ABL 8MEM and ABL 7RM			
Protection against undervoltage		Yes			
Protection against overloads and short-circuits		Yes, voltage detection. Automatic restart on elimination on the fault			
Diagnostic relay		–			
Compatibility with function modules		–			
Power reserve (Boost)		1,25 to 1,4 In during 1 minute, depending on model (with ABL 8MEM)			No
Output voltage		5 V ⎓	12 V ⎓	24 V ⎓	48 V ⎓
Output current	0.3 A			**ABL 8MEM24003** *(Modular)*	
	0.6 A			**ABL 8MEM24006** *(Modular)*	
	1.2 A			**ABL 8MEM24012** *(Modular)*	
	2 A		**ABL 8MEM12020** *(Modular)*		
	2.5 A			**ABL 7RM24025** *(Modular)*	**ABL 7RP4803** *(Optimum)*
	3 A			**ABL 8REM24030** *(Optimum)*	
	4 A	**ABL 8MEM05040** *(Modular)*			
	4.8 A				
	5 A		**ABL 7RP1205** *(Optimum)*	**ABL 8REM24050** *(Optimum)*	
	6 A				
	10 A				
	20 A				
	40 A				
Pages		Please, consult our catalogue “Phaseo, Power supplies & transformers”			

Regulated switch mode Phaseo Universal range industrial power supplies				Regulated switch mode Phaseo range AS-Interface for AS-Interface cabling system	
					
100...120 V ∿ and 200...500 V ∿ *(1)*	380...500 V ∿	24 V ⎓		100...240 V	
Single-phase (N-L1) or 2-phase (L1-L2) connection	–	–		Single-phase (N-L1) connection	
	3-phase (L1-L2-L3) connection	–		Single-phase (N-L1) connection	
	3-phase (L1-L2-L3) connection	–		–	
Yes		–		No	Yes
Yes		–		–	Yes
Yes, current limitation or undervoltage detection		Yes, current limitation		Yes	
Yes, depending on model				–	
Yes with buffer module, battery and battery control modules, redundancy module and discriminating downstream protection module				–	
1,5 In during 4 secondes		No		No	
24 V ⎓		5 V ⎓	7...12 V ⎓	30 V ⎓	24 V ⎓
			ABL 8DCC12020 *(2)*		
				ASI ABLB3002 **ASI ABLD3002** *(3)* **ASI ABLM3024** *(4)*	
ABL 8RPS24030					**ASI ABLM3024** *(4)*
				ASI ABLB3004 **ASI ABLD3004** *(3)*	
ABL 8RPS24050					
		ABL 8DCC05060 *(2)*			
ABL 8RPS24100					
ABL 8RPM24200	**ABL 8WPS24200**				
	ABL 8WPS24400				

Please, consult our catalogue “Phaseo, Power supplies & transformers”

(1) Except **ABL 8RPM24200**. ∿ 100...120 V and ∿ 200...240 V.
(2) ⎓/⎓ converter module, requires to be associated with the Phaseo Universal range power supply.
(3) With earth fault detection.
(4) One output 30 V ⎓ and one output 24 V ⎓ ± 5 %.

Schneider Electric Industries SAS

www.schneider-electric.com

Head Office
35, rue Joseph Monier
F-92500 Rueil-Malmaison
France

Design: Schneider Electric
Photos: Schneider Electric
Printed by:

DIA6ED2100106EN

ART. 960415

January 2010