Product data sheet
Characteristics

BMXART0814H
analog input module M340 - 8 inputs - temperature

Product availability : Stock - Normally stocked in distribution facility

Price* : 1878.00 USD

Main

Range of product	Modicon M340 automation platform
Product or component type	Analog input module
Product specific application	For severe environments
Electrical connection	2 connectors 40 ways
Input output isolation	Isolated
Input level	Low level
Analogue input number	8
Analogue input type	Voltage +/- 1.28 V Voltage +/- 160 mV Voltage +/- 320 mV Voltage +/- 40 mV Voltage +/- 640 mV Voltage +/- 80 mV Resistor 400 Ohm 2 wires Resistor 400 Ohm 3 wires Resistor 400 Ohm 4 wires Resistor 4000 Ohm 2 wires Resistor 4000 Ohm 3 wires Resistor 4000 Ohm 4 wires Temperature probe -100...+260 °C Cu 10 Temperature probe -100...+450 °C Pt 100 UL/JIS Temperature probe -100...+450 °C Pt 1000 UL/JIS Temperature probe -200...+850 °C Pt 100 IEC Temperature probe -200...+850 °C Pt 1000 IEC Temperature probe -60...+180 °C Ni 100 Temperature probe -60...+180 °C Ni 1000 Thermocouple +130...+1820 °C thermocouple B Thermocouple +270...+1300 °C thermocouple N Thermocouple -200...+600 °C thermocouple U Thermocouple -200...+760 °C thermocouple J Thermocouple -200...+900 °C thermocouple L Thermocouple -270...+1000 °C thermocouple E Thermocouple -270...+1370 °C thermocouple K Thermocouple -270...+400 °C thermocouple T

Disclaimer: This documentation is not intended as a substitute for and is not to be used for determining suitability or reliability of these products for specific user applications

	Thermocouple -50...+1769 °C thermocouple R Thermocouple -50...+1769 °C thermocouple S

Complementary

Analog/Digital conversion	Sigma delta 16 bits
Analogue input resolution	15 bits + sign
Input impedance	10 MOhm
Permitted overload on inputs	+/- 7.5 V +/- 1.28 V +/- 7.5 V +/- 160 mV +/- 7.5 V +/- 320 mV +/- 7.5 V +/- 40 mV +/- 7.5 V +/- 640 mV +/- 7.5 V +/- 80 mV
Common mode rejection	120 dB 50/60 Hz
Differential mode rejection	60 dB 50/60 Hz
Cold junction compensation	External by Pt100 probe
Type of filter	First order digital filtering
Nominal read cycle time	400 ms with temperature probe 200 ms with thermocouple
Measurement error	+/- 0.7 °C Ni 1000 25 °C +/- 1.5 °C Ni 1000 - 25...70 °C +/- 2.1 °C Ni 100 25 °C +/- 2.1 °C Pt 100 25 °C +/- 2.1 °C Pt 1000 25 °C +/- 2.7 °C thermocouple U 25 °C +/- 2.8 °C thermocouple J 25 °C +/- 3 °C thermocouple L 25 °C +/- 3.2 °C thermocouple R 25 °C +/- 3.2 °C thermocouple S 25 °C +/- 3.5 °C Ni 100 - 25...70 °C +/- 3.5 °C Pt 100 - 25...70 °C +/- 3.5 °C Pt 1000 - 25...70 °C +/- 3.5 °C thermocouple B 25 °C +/- 3.7 °C thermocouple E 25 °C +/- 3.7 °C thermocouple K 25 °C +/- 3.7 °C thermocouple N 25 °C +/- 3.7 °C thermocouple T 25 °C +/- 4 °C Cu 10 25 °C +/- 4.5 °C Cu 10 - 25...70 °C +/- 5.5 °C thermocouple J - 25...70 °C +/- 5.5 °C thermocouple L - 25...70 °C +/- 5.5 °C thermocouple R - 25...70 °C +/- 5.5 °C thermocouple S - 25...70 °C +/- 5.5 °C thermocouple U - 25...70 °C +/- 6 °C thermocouple B - 25...70 °C +/- 6 °C thermocouple E - 25...70 °C +/- 6 °C thermocouple K - 25...70 °C +/- 6 °C thermocouple N - 25...70 °C +/- 6 °C thermocouple T - 25...70 °C <= 0.2 % of full scale +/- 1.28 V - 25...70 °C <= 0.2 % of full scale +/- 160 mV - 25...70 °C <= 0.2 % of full scale +/- 320 mV - 25...70 °C <= 0.2 % of full scale +/- 40 mV - 25...70 °C <= 0.2 % of full scale +/- 640 mV - 25...70 °C <= 0.2 % of full scale +/- 80 mV - 25...70 °C <= 0.3 % of full scale 400 Ohm - 25...70 °C <= 0.3 % of full scale 4000 Ohm - 25...70 °C 0.05 % of full scale +/- 1.28 V 25 °C 0.05 % of full scale +/- 160 mV 25 °C 0.05 % of full scale +/- 320 mV 25 °C 0.05 % of full scale +/- 40 mV 25 °C 0.05 % of full scale +/- 640 mV 25 °C 0.05 % of full scale +/- 80 mV 25 °C 0.12 % of full scale 400 Ohm 25 °C 0.12 % of full scale 4000 Ohm 25 °C
Temperature drift	25 ppm/°C 400 Ohm 25 ppm/°C 4000 Ohm 25 ppm/°C Ni 1000 25 ppm/°C thermocouple B 25 ppm/°C thermocouple E

Life Is On Schneider Electric

	25 ppm/°C thermocouple J 25 ppm/°C thermocouple K 25 ppm/°C thermocouple L 25 ppm/°C thermocouple N 25 ppm/°C thermocouple R 25 ppm/°C thermocouple S 25 ppm/°C thermocouple T 25 ppm/°C thermocouple U 30 ppm/°C +/- 1.28 V 30 ppm/°C +/- 160 mV 30 ppm/°C +/- 320 mV 30 ppm/°C +/- 40 mV 30 ppm/°C +/- 640 mV 30 ppm/°C +/- 80 mV 30 ppm/°C Cu 10 30 ppm/°C Ni 100 30 ppm/°C Pt 100 30 ppm/°C Pt 1000
Recalibration	Internal
Detection type	Open circuit Cu 10 Open circuit Ni 100 Open circuit Ni 1000 Open circuit Pt 100 Open circuit Pt 1000 Open circuit thermocouple B Open circuit thermocouple E Open circuit thermocouple J Open circuit thermocouple K Open circuit thermocouple L Open circuit thermocouple N Open circuit thermocouple R Open circuit thermocouple S Open circuit thermocouple T Open circuit thermocouple U
Maximum wiring resistance	20 Ohm 2 wires Cu 10 20 Ohm 2 wires Ni 100 20 Ohm 2 wires Pt 100 20 Ohm 3 wires Cu 10 20 Ohm 3 wires Ni 100 20 Ohm 3 wires Pt 100 200 Ohm 2 wires Ni 1000 200 Ohm 2 wires Pt 1000 200 Ohm 3 wires Ni 1000 200 Ohm 3 wires Pt 1000 50 Ohm 4 wires Cu 10 50 Ohm 4 wires Ni 100 50 Ohm 4 wires Pt 100 500 Ohm 4 wires Ni 1000 500 Ohm 4 wires Pt 1000
Measurement resolution	0.1 °C Cu 10 0.1 °C Ni 100 0.1 °C Ni 1000 0.1 °C Pt 100 0.1 °C Pt 1000 0.1 °C thermocouple B 0.1 °C thermocouple E 0.1 °C thermocouple J 0.1 °C thermocouple K 0.1 °C thermocouple L 0.1 °C thermocouple N 0.1 °C thermocouple R 0.1 °C thermocouple S 0.1 °C thermocouple T 0.1 °C thermocouple U 1280/2exp14 mV +/- 1.28 V 160/2exp14 mV +/- 160 mV 320/2exp14 mV +/- 320 mV 40/2exp14 mV +/- 40 mV 40/2exp14 mV 400 Ohm 4000/2exp14 mV 4000 Ohm 640/2exp14 mV +/- 640 mV 80/2exp14 mV +/- 80 mV
Maximum conversion value	+/- 100 % 400 Ohm +/- 100 % 4000 Ohm

	+/- 102.5 % +/- 1.28 V +/- 102.5 % +/- 160 mV +/- 102.5 % +/- 320 mV +/- 102.5 % +/- 40 mV +/- 102.5 % +/- 640 mV +/- 102.5 % +/- 80 mV
Status LED	1 LED green RUN 1 LED per channel green channel diagnostic 1 LED red ERR 1 LED red I/O
Product weight	0.36 lb(US) (0.165 kg)
Current consumption	150 mA at 3.3 V DC

Environment

Ambient air temperature for operation	-13...158 °F (-25...70 °C)
Relative humidity	10...95 % without condensation
IP degree of protection	IP20
Protective treatment	TC Conformal coating Humiseal 1A33
Environmental characteristic	3C3 conforming to EN/IEC 60721-3-3 3C4 conforming to EN/IEC 60721-3-3

Ordering and shipping details

Category	18160 - MODICON M340
Discount Schedule	PC34
GTIN	00785901991182
Nbr. of units in pkg.	1
Package weight(Lbs)	0.5
Returnability	Y
Country of origin	FR

Offer Sustainability

Sustainable offer status	Green Premium product
RoHS (date code: YYWW)	Compliant - since 0911 - Schneider Electric declaration of conformity Schneider Electric declaration of conformity
REACh	Reference not containing SVHC above the threshold Reference not containing SVHC above the threshold
Product environmental profile	Available
Product end of life instructions	Available

Contractual warranty

Warranty period	18 months

BMXART0814H

Modules Mounted on Racks

Dimensions

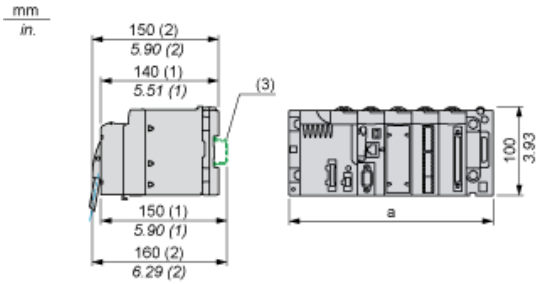

(1) With removable terminal block (cage, screw or spring).
(2) With FCN connector.
(3) On AM1 ED rail: 35 mm wide, 15 mm deep. Only possible with BMXXBP0400/0400H/0600/0600H/0800/0800H rack.

Rack references	a in mm	a in in.
BMXXBP0400 and BMXXBP0400H	242.4	09.54
BMXXBP0600 and BMXXBP0600H	307.6	12.11
BMXXBP0800 and BMXXBP0800H	372.8	14.68
BMXXBP1200 and BMXXBP1200H	503.2	19.81

Wiring Diagram

Below example shows a probe configuration with:

- Channel 0/4: Thermocouple
- Channel 1/5: 2-wires RTD
- Channel 2/6: 3-wires RTD
- Channel 3/7: 4-wires RTD

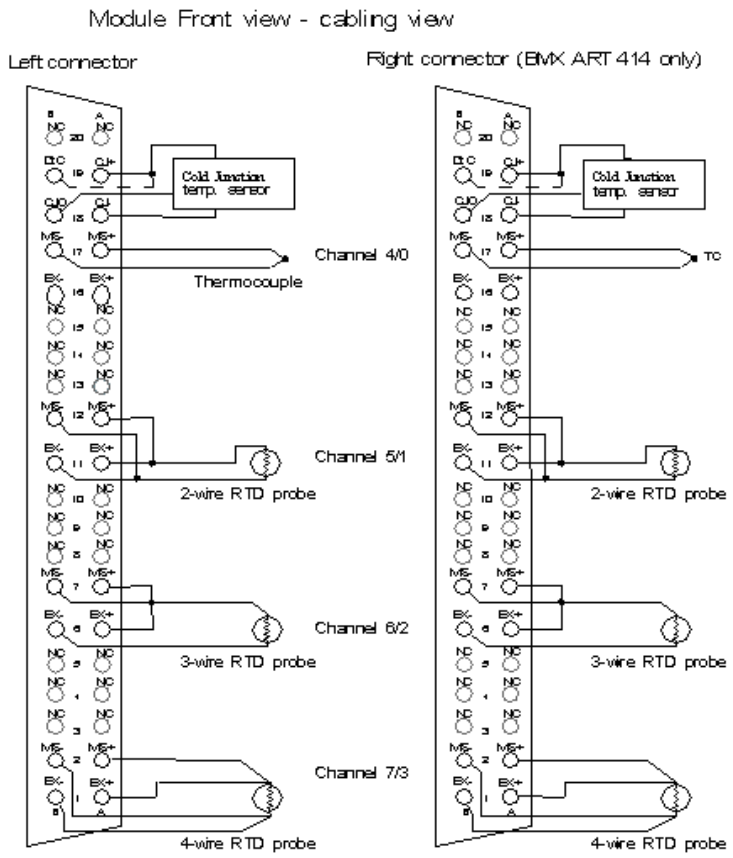

MS+ Thermocouple + input
MS- Thermocouple - input
EX+ RTD probe current generator + output
EX- RTD probe current generator - output
NC Not connected
DtC The CJC sensor detection input is connected to CJ+ if the sensor type is DS600. It is not connected (NC) if the sensor type is LM31.

NOTE: The CJC sensor is needed for TC only.