HUBBELL
Power Systems

CATALOG

Veri*Lite™ Line Post Insulators

for 15-69kV Applications

HUBBELL

Veri*Lite™ Line Post Insulators - Catalog Number Key

8 0 S 0 6 9 0 2 0 9 B 2

Polymer Type
80S = Veri*Lite SR Polymer

Polymer Type
8Hardware Finish

Rating
15 = rated up to 15kV
25 = rated up to 28kV
28 = rated up to 35kV
46 = rated up to 46kV
69 = rated up to 69kV

Dimensioning
0 = ANSI/CSA Quality Conformance Tests
9 = Special

Packaging Suffix
Blank = 15kV to 35kV = 3 per cardboard box
46kV & 69kV = 21 per wooden crate
B2 = 46kV & 69kV = 2 per cardboard box
B3 = 46kV & 69kV = 3 per cardboard box

Base End Fitting
00 = Gain Base-Transverse
09 = 3/4 - 10 Stud Base
10 = 7/8 - 9 Stud Base

Line End Fitting
0 = Two-Hole Blade*
1 = Horizontal Clamptop
2 = Vertical Clamptop
6 = Horizontal Clamptop (longer pintle bolt)
A = Vertical Clamptop (longer pintle bolt)
F = 'F' Neck
K = Universal Clamp
B = Hotstick Operable Universal Clamp w/ Eyenut

**Two-Hole Blade only available for 46-69kV*

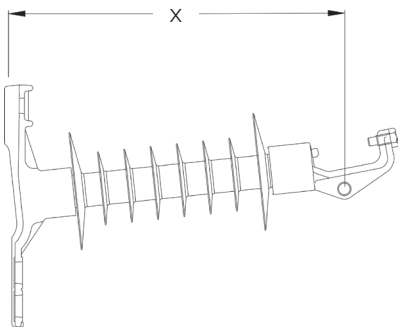

Horizontal Clamptop & Gain Base (0100)

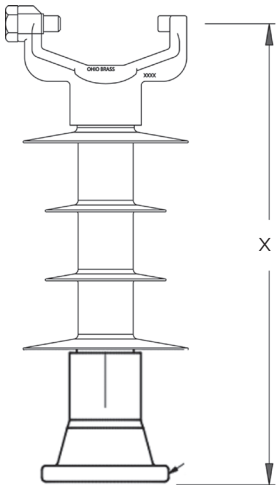

Vertical Clamptop & Stud Base (0209 & 0210)

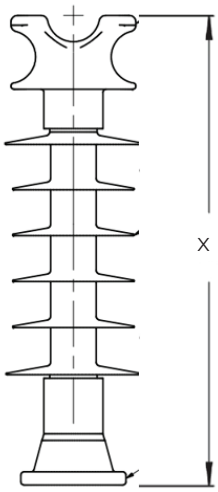

F-Neck & Stud Base (0F09 & 0F10)

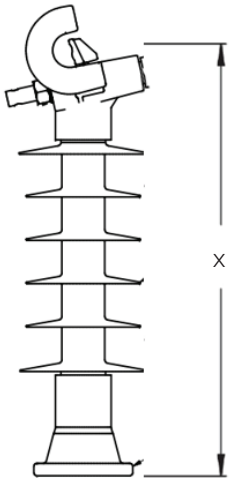

Universal Clamptop & Stud Base (0K09 & 0K10)

Veri*Lite™ Line Post Insulators

Veri*Lite™ Silicone Rubber Line Post Insulators with Universal Clamp for 15-69kV Applications

The Ohio Brass Universal Clamp end fitting is used with the Veri*Lite™ Line Post (VLLP) insulator family. Combining the proven direct bond silicone technology of the Ohio Brass VLLP design, the Universal Clamp offers a flexible rangetaking connection that can be installed in either the vertical or horizontal direction. The Universal Clamp design eliminates the need for a separate additional conductor clamp; saving both money and installation time. In addition, the optional hotstick-operable feature provides flexibility for live-line work.

Design Features

- Proven direct bond interface
- Housing molded with proprietary silicone rubber compound
- Universal clamp works for a conductor diameter range of 0.20” (5.08 mm) to 1.34” (34 mm) to provide flexibility in the field
- Hot Stick option allows for live-line operability
- Integral clamptop design eliminates need for additional trunnion clamp. It can be installed in vertical or horizontal directions, thus reducing inventory
- Meets requirements of the latest edition of CSA 411.6 and ANSI C29.18

Line Post Mechanical and Electrical Characteristics

Typical Line Voltage kV	Catalog Number	ANSI C29.18 Class	CSA C411.6 Class	Post Style	Live / Line End Fitting	Ground / Tower Base End Fitting	"X" Section Length Inches (mm)	Dry Arc Distance Inches (mm)	Creepage / Leakage Distance	Total Weathershed Quantity	Weathershed Shed Dia. Inches (mm)
15	**80S0150100**	51-31	--	Horz	Clamptop	Gain	12.5 (318)	7.4 (188)	11.0 (279)	2	4.8 (121)
	80S0150109	51-21	LP-15	Horz	Clamptop	3/4 - 10 Stud	13.3 (339)				
	80S0150209	51-11	LP-15	Vert	Clamptop	3/4 - 10 Stud	12.8 (324)				
	80S0150F09	51-1F	LP-15	Vert/Horz	F-Neck	3/4 - 10 Stud	12.4 (315)				
	80S0150K09	--	LP-15	Vert/Horz	Universal	3/4 - 10 Stud	13.2 (334)				
25/28	**80S0250100**	51-32	--	Horz	Clamptop	Gain	14.3 (362)	9.6 (244)	17.3 (439)	4	5.2 (132)
	80S0250109	51-22	LP-25	Horz	Clamptop	3/4 - 10 Stud	15.1 (383)				
	80S0250209	51-12	LP-25	Vert	Clamptop	3/4 - 10 Stud	14.5 (368)				
	80S0250F09	51-2F	LP-25	Vert/Horz	F-Neck	3/4 - 10 Stud	14.2 (360)				
	80S0250K09	--	LP-25	Vert/Horz	Universal	3/4 - 10 Stud	14.9 (379)				
35	**80S0280100**	51-33	--	Horz	Clamptop	Gain	16.5 (420)	11.7 (297)	26.1 (662)	6	5.1 (130)
	80S0280109	51-23	LP-28M	Horz	Clamptop	3/4 - 10 Stud	17.4 (441)				
	80S0280209	51-13	LP-28M	Vert	Clamptop	3/4 - 10 Stud	16.8 (425)				
	80S0280F09	51-3F	LP-28M	Vert/Horz	F-Neck	3/4 - 10 Stud	16.5 (418)				
	80S0280K09	--	LP-28M	Vert/Horz	Universal	3/4 - 10 Stud	17.2 (438)				
46	**80S0460000**	--	--	Horz	Blade	Gain	19.2 (488)	14.4 (390)	34.3 (872)	8	7.1 (179)
	80S0460100	51-34	--	Horz	Clamptop	Gain	19.0 (482)				
	80S0460009	--	LP-46	Horz	Blade	3/4 - 10 Stud	20.0 (508)				
	80S0460109	51-24	LP-46	Horz	Clamptop	3/4 - 10 Stud	19.8 (504)				
	80S0460209	51-14	LP-46	Vert	Clamptop	3/4 - 10 Stud	20.1 (510)				
	80S0460F09	51-4F	LP-46	Vert/Horz	F-Neck	3/4 - 10 Stud	19.5 (495)				
	80S0460K09	--	LP-46	Vert/Horz	Universal	3/4 - 10 Stud	19.6 (498)				
69	**80S0690000**	--	--	Horz	Blade	Gain	25.8 (656)	22.3 (566)	58.2 (1478	12	7.5 (190
	80S0690100	51-36	--	Horz	Clamptop	Gain	25.6 (650)				
	80S0690010	--	LP-69M	Horz	Blade	7/8 - 9 Stud	26.6 (676)				
	80S0690110	51-26	LP-69M	Horz	Clamptop	7/8 - 9 Stud	26.5 (672)				
	80S0690210	51-16	LP-69M	Vert	Clamptop	7/8 - 9 Stud	26.8 (680)				
	80S0690F10	--	LP-69M	Vert/Horz	F-Neck	7/8 - 9 Stud	26.1 (663)				
	80S0690K10	--	LP-69M LP-69M	Vert/Horz	Universal	7/8 - 9 Stud	26.2 (667)				

Notes:

Maximum Design Tension for Clamptop is 2500 pounds (11 kN)

15, 25 & 35kV Units use 1.5 inch (38 mm) Diameter Rod

46 & 69 kV Units use 1.75 inch (44 mm) Diameter Rod

Maximum Design Tension for Two-Hole Blade is 5000 lbs. (22 kN)

46kV & 69kV standard part numbers have a minimum order quantity of 21 and will be packed in standard wooden crates In order to receive a quantity less than 21 pieces for 46kV & 69kV, add either B2 (2 per box) or B3 (3 per box)

Line Post Mechanical and Electrical Characteristics

Minor / Inner Dia. Inches (mm)	60 Hz Flashover Dry kV	60 Hz Flashover Wet kV	Critical Impulse Flashover Pos. kV	Impulse Withstand Pos. kV	SCL pounds (kN)	MDCL pounds (kN)	STL pounds (kN)	Net Weight pounds (kg)	Box Qty (Suffix)	Total Qty per Pallet	Qty per Crate	Typical Line Voltage kV
-	90	70	150	140	2800 (12.5)	1235 (5.5) 1350 (6)*	5000 (22.2)	9.8 (4.5)	3	36	--	15
								6.9 (3.1)		60		
								6.5 (2.9)		60		
								6.6 (3.0)		60		
								6.9 (3.1)		60		
3.8 (96)	110	75	185	170	2800 (12.5)	1235 (5.5) 1350 (6)*	5000 (22.2)	10.3 (4.7)	3	36	--	25/28
								7.3 (3.3)		60		
								7.0 (3.2)		60		
								7.1 (3.2)		60		
								7.3 (3.3)		60		
4.6 (117)	135	100	215	200	2800 (12.5)	1235 (5.5) 1350 (6)*	5000 (22.2)	11.2 (5.1)	3	36	--	35
								8.2 (3.7)		60		
								7.8 (3.5)		60		
								8.0 (3.6)		60		
								8.2 (3.7)		60		
4.4 (112)	170	125	260	235	2800 (12.5)	1235 (5.5) 1350 (6)*	5000 (22.2)	19.7 (8.9)	2 (B2)	--	21	46
								18.6 (8.4)	2 (B2)		21	
								18.6 (8.4)	2 (B2)		21	
								13.5 (6.1)	3 (B3)		21	
								14.1 (6.4)	3 (B3)		21	
								13.9 (6.3)	3 (B3)		21	
								13.5 (6.1)	3 (B3)		21	
5.2 (132)	230	180	360	330	2470 (11.0)	1235 (5.5)	5000 (22.2)	22.1 (10.0)	2 (B2)	--	21	69
								21.0 (9.5)	2 (B2)		21	
								16.9 (7.7)	3 (B3)		21	
								15.9 (7.2)	3 (B3)		21	
								16.5 (7.5)	3 (B3)		21	
								12.0 (5.4)	2 (B2)		21	
								15.9 (7.2)	3 (B3)		21	

**MDCL of 1350 lbs valid for posts with universal clamptop line fittings only.*

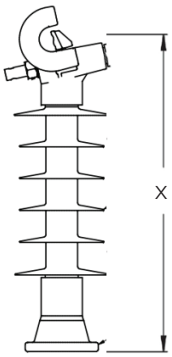

Universal Clamptop & Stud Base (0K09 & 0K10)

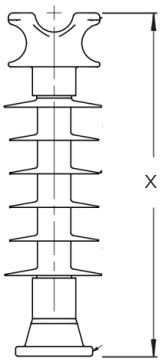

F-Neck & Stud Base (0F09 & 0F10)

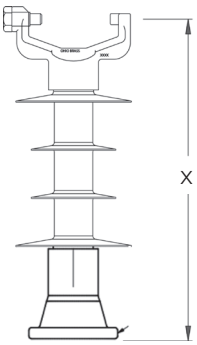

Vertical Clamptop & Stud Base (0209 & 0210)

Line Post End Fitting Details

Post Base Fittings Dimensions

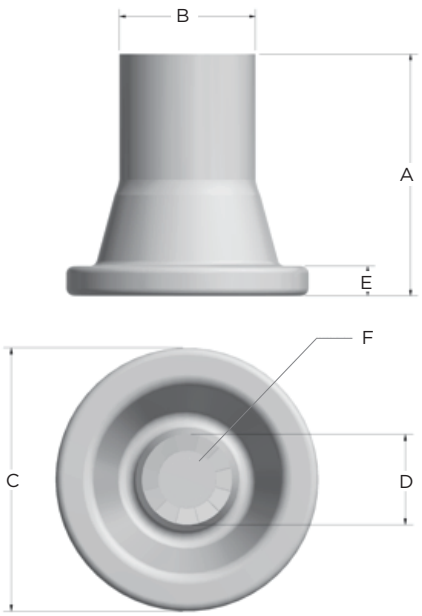

15, 25 & 35 kV (1.5″ Rod) Stud Base

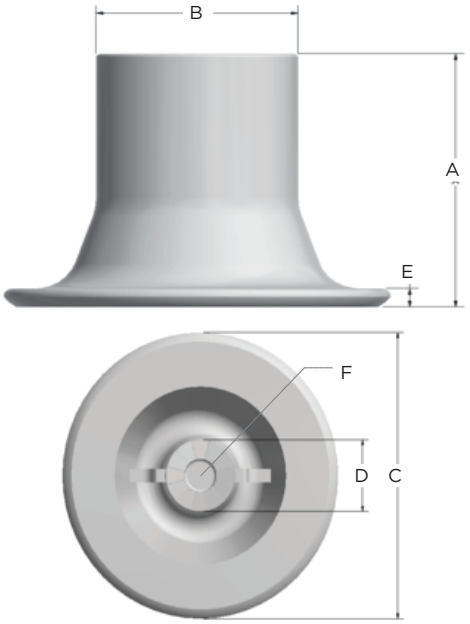

46 & 69 kV (1.75″ Rod) Stud Base

Post Line Fittings Dimensions

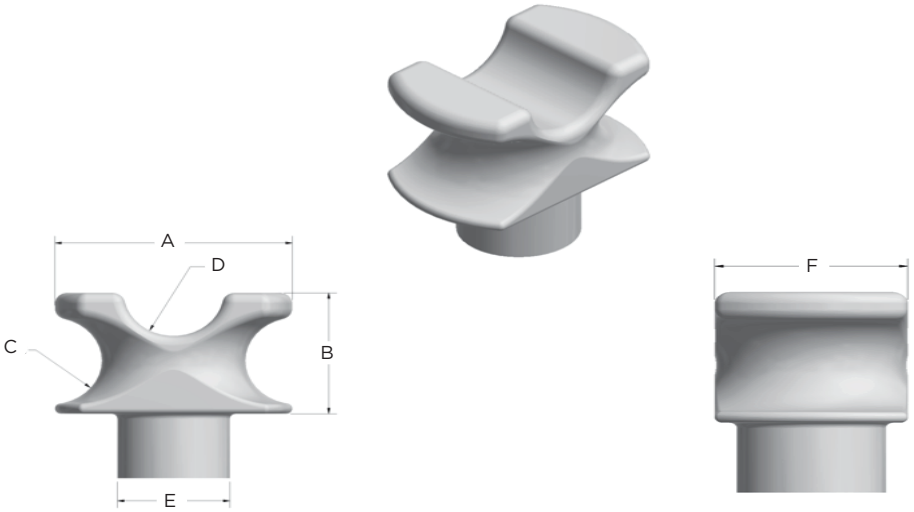

15-69 kV F-Neck Cap

Line Post Fittings Dimensions (in inches

Type	Rod	A	B	C	D	E	F	G	H	I	Material
3/4 - 10 Stud	1.5″	4.06	2.25	4.00	1.38	0.50	3/4-10 UNC-2B	-	-	-	60-40-18 DI
Base (09)	1.75″	4.15	2.88	5.50		0.31					
7/8 - 9 Stud	1.5″	4.06	2.25	4.00	1.38	-		-	-	-	60-40-18 DI
Base (10)	1.75″	4.15	2.88	5.50		0.31					
F. Neck (F)	1.5″	4.75	2.81	R1.00	R1.00	2.25		-	-	-	60-40-18 DI
	1.75″	4.25	2.55			2.88					

Line Post End Fitting Details

Post Base Fittings Dimensions

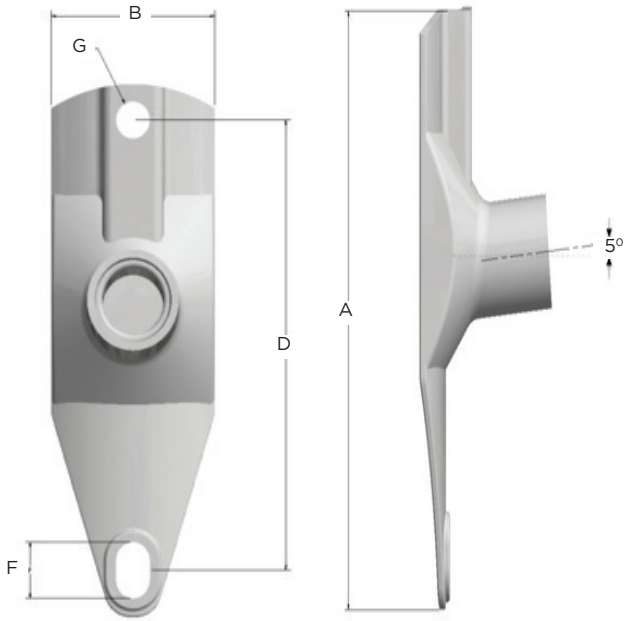

15, 25 & 35 kV (1.5″ Rod) Horizontal Gain Base

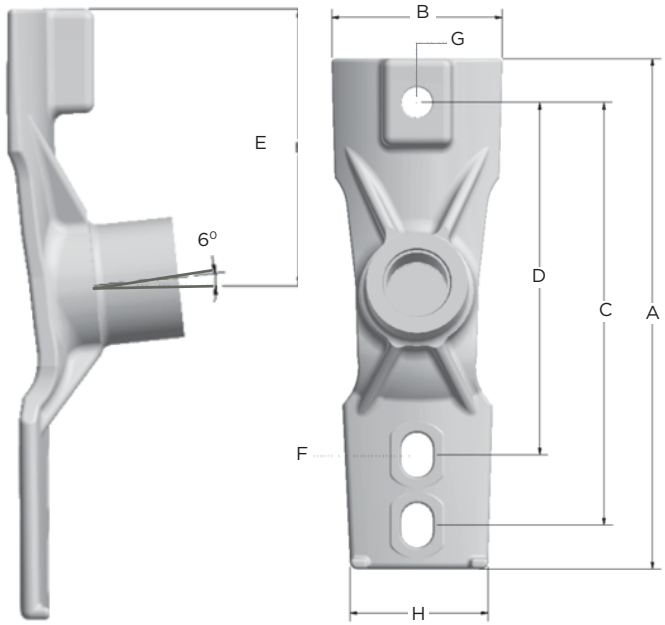

46 & 69 kV (1.75″ Rod) Horizontal Gain Base

Post Line Fittings Dimensions

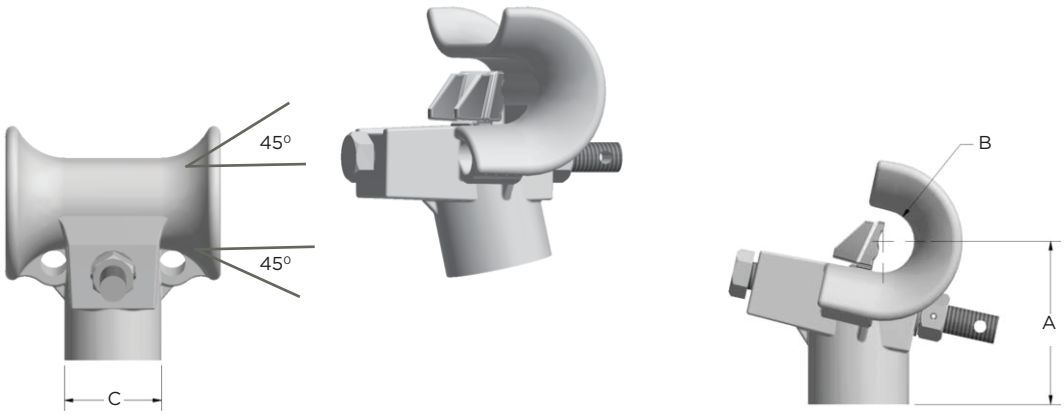

15-69 kV (1.5″ & 1.75″ Rod) Universal Clamptop

Line Post Fittings Dimensions (in inches)

Type	Rod	A	B	C	D	E	F	G	H	I	Material
H. Gain Base (00)	1.5″	11.80	4.00	-	10.00	-	1.25 x 0.82 1.26 x 0.89	0.82	-	-	60-40-18 DI
	1.75″	14.50	4.80	12.00		6.75		0.88	-		
Universal Clamptop (K)	1.5″	3.62	R.69	2.25	-	-	-	-	4.0	-	60-40-18 DI
	1.75″	3.74		2.88							

Line Post End Fitting Details

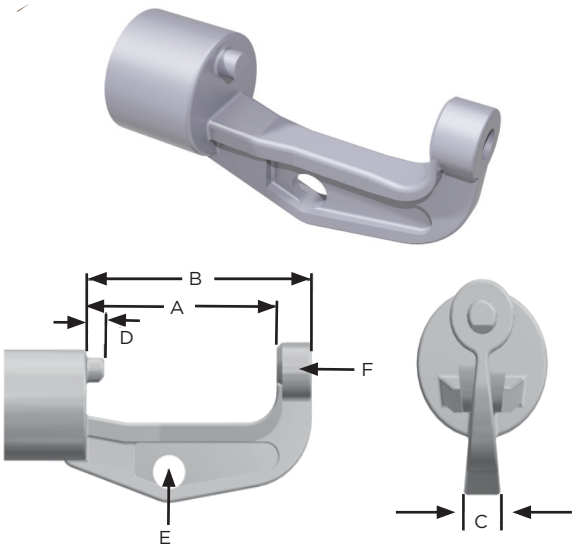

15-69 kV (1.5" & 1.75" Rod)
Horizontal Clamptop Cap

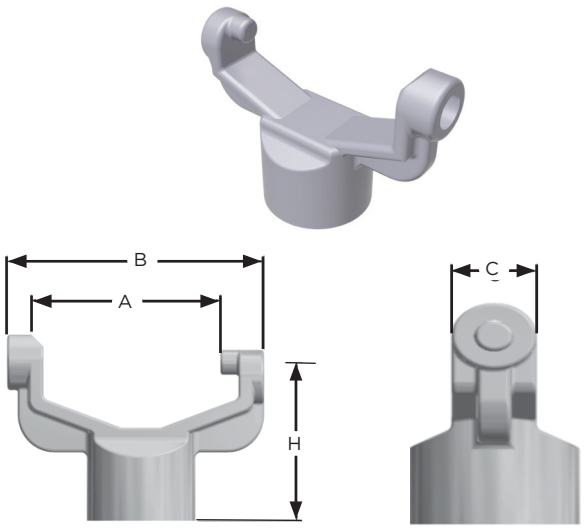

15-69 kV (1.5" & 1.75" Rod)
Vertical Clamptop Cap

Post Line Fittings Dimension

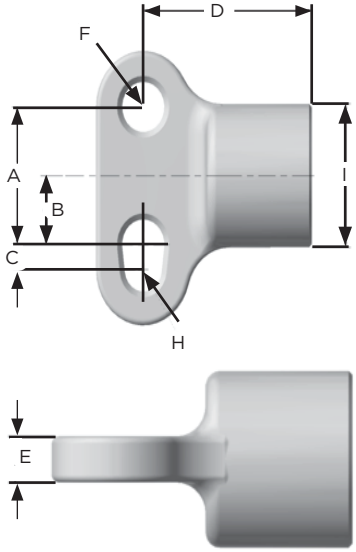

46-69kV (1.75" Rod) Two Hole Blade

Line Post Fittings Dimensions (in inches)

Type	Rod	A	B	C	D	E	F	G	H	I	Material
H. Clamptop Cap (1)	1.5″	4.05	4.80	0.64	0.38	0.69	5/8-11 UNC-2B	-	-	-	60-40-18 DI
	1.75″	4.00	4.75	0.62		0.81					
V. Clamptop Cap (2)	1.5″	3.92	5.32	1.12	0.38	-	5/8-11 UNC-2B	-	3.19	1.63	60-40-18 DI
	1.75″	4.25	5.37	-					4.07	1.89	
Two Hole Blade (0)	1.75″	2.75	1.38	0.50	4.00	0.75	1.00 Dia.	R.50	R.44	-	60-40-18 DI

Line Post Insulator Studs

DF19M Series

Serrated collar and lockwasher secure unit to line post insulator and prevent accidental disassembly. Cut threads above serrated collar, rolled threads below collar.

For Steel Crossarms

Catalog No.	Dimensions (in.)				Hardware Included	Standard Package	Weight 100 Pcs.
	A	B	C	D			
DF19M1	1-1/8	1-3/4	5/8	3/4	(1) reg. hexnut and 2) spring lockwashers	100 pcs.	43 lbs.
DF19M3	1-1/8	1-3/4	3/4	3/4	(1) reg. hexnut and 2) spring lockwashers	100 pcs.	54 lbs.
875833001	1-3/8	2	7/8	7/8	(1) reg. hexnut and 2) spring lockwashers	100 pcs.	85 lbs.

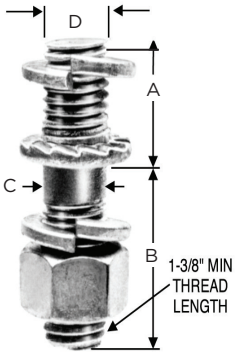

DF19M3

For Steel Crossarms

Catalog No.	Dimensions (in.)				Hardware Included	Standard Package	Weight 100 Pcs.
	A	B	C	D			
DF19M2	1-1/8	7	5/8	3/4	(1) sq. nut, (1) sq. washer (1) spring lockwasher, (1) MF locknut	50 pcs.	102 lbs.
DF19M4	1-1/8	7	3/4	3/4	(1) sq. nut, (1) sq. washer (1) spring lockwasher, (1) MF locknut	40 pcs.	140 lbs.
DF19M19	1-1/8	10	5/8	3/4	(1) sq. nut, (1) sq. washer (1) spring lockwasher, (1) MF locknut	25 pcs.	176 lbs.
DF19M20	1-1/8	12	5/8	3/4	(1) sq. nut, (1) sq. washer (1) spring lockwasher, (1) MF locknut	25 pcs.	192 lbs.
***DF19M29**	1-1/8	14	3/4	3/4	(1) sq. nut, (1) sq. washer (1) spring lockwasher, (1) MF locknut	20 pcs.	234 lbs.
***DF19M32**	1-1/8	24	3/4	3/4	(1) sq. nut, (1) sq. washer (1) spring lockwasher, (1) MF locknut	15 pcs.	342 lbs.
875843001	1-3/8	8	7/8	7/8	(1) sq. nut, (1) sq. washer (1) spring lockwasher, (1) MF locknut	50 pcs.	277 lbs.

**DF19M29 and DF19M32 include (1) additional double coil lockwasher.*

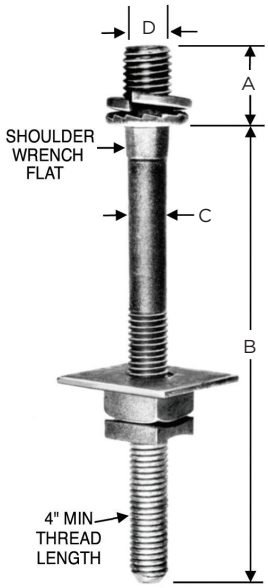

DF19M2

Clamptop Clamps inches (mm)

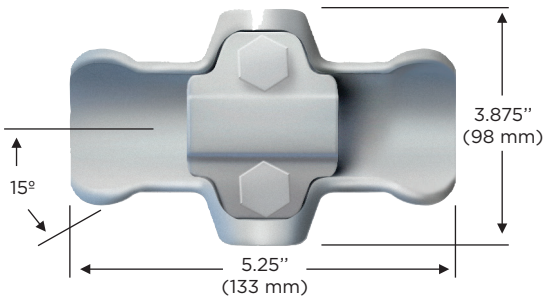

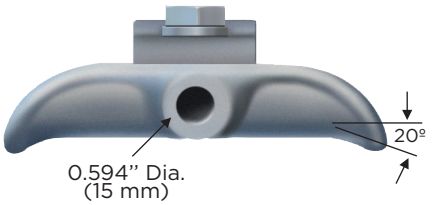

Figure 1

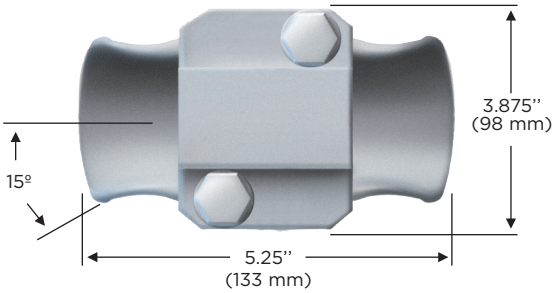

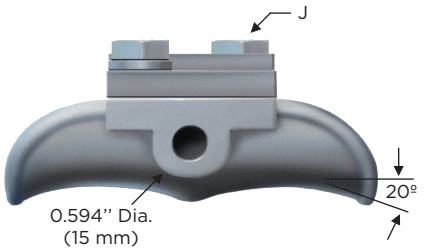

Figure 2

Fig. No.	Catalog Number	Body & Keeper Material Ring	Clamping Range Inches (mm	Ultimate Body Strength lbs. (kN)
1	**TSC57**	356-T6 AL	0.25 - 0.57 (6.3 - 14.4)	2800 (12.46)
1	**TSC86**	356-T6 AL	0.35 - 0.86 (8.8 - 21.8)	2800 (12.46)
1	**TSC106**	356-T6 AL	0.50 - 1.06 (12.7 - 26.9)	2800 (12.46)
1	**TSC150**	356-T6 AL	1.00 - 1.50 (25.4 - 38.1)	2800 (12.46)
2	**TSC200**	356-T6 AL	1.50 - 2.00 (38.1 - 50.8)	2800 (12.46)

Pole Top Insulator Bracket

Typical Side View

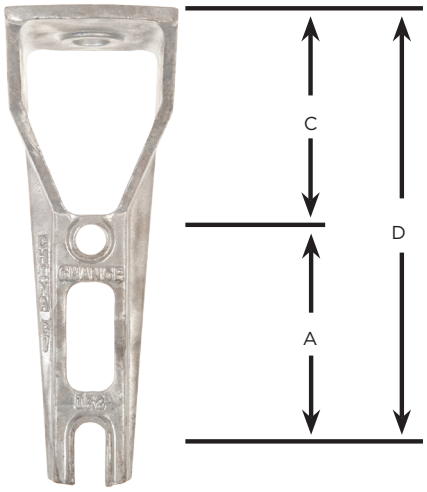

IB2

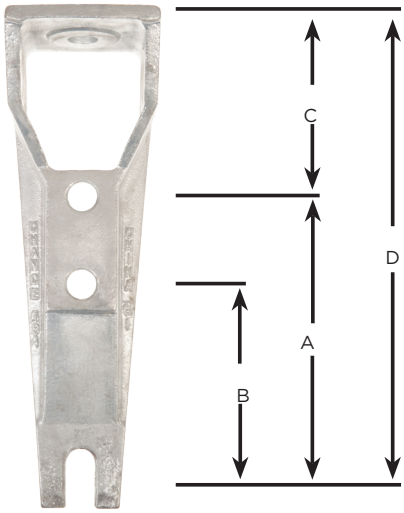

IB3, IB4, IB5, IB6

Mounts post or pin type insulator to top of pole. Variety of bolt hole locations for mounting to pole.

Catalog Number	Minimum Ultimate Bending Moment at Base	Accepts Insulator Stud Dia.	Accepts Mounting Bolt Dia.	Dim. A	Dim. B	Dim. C	Dim. D	Dim. E	Top Plate (width x depth)	Approx. Ship Wt. Each
IB2	20,000 in-lbs	5/8" or 3/4"	5/8"	5"	N/A	5"	10-3/4"	1"	3-3/4" Sq.	4.2 lbs.
IB3*	30,000 in-lbs			8"	5-1/4"		13"	1-1/2"		6.2 lbs.
IB4	40,000 in-lbs		5/8" or 3/4"	8"	5-1/4"		13-3/4"	1"	4" x 3-3/4"	7.0 lbs
IB5	50,000 in-lbs			8"	5-1/2"		14"	1-1/4"	4" Sq.	9.8 lbs.

** RUS Listed*

Pole Top Insulator Bracket

Angle Crossarm Bracket

Mounts post insulators at 30° angle on crossarm for use on running corners.

Catalog No.	Crossarm Size	Mtg. Bolt Diameter	Stud Bolt Diameter	Approx. Ship Wt. Lbs per 100 pcs.
1XAB	3-3/4" x 4-3/4" Max. and Round Crossarms	3/4"	3/4"	610

Ductile iron per ASTM A-536

Hot dipped galvanized per ASTM A-153

Post Insulator Curved Base Bracket

This bracket can be used for mounting distribution post-type insulators from 15 kV to 34.5 kV on the side of the pole. The base has a pole-shape back for convenient installation. Brackets can be placed in a phase-over-phase arrangement or can be mounted on opposite sides of the pole for "armless" construction.

Catalog No.	Dimension (in)			Angle A	Approx. Ship Wt. Lbs per 100 pcs.
	L	D	W		
***C2060009**	9-1/2	13/16	4	15°	1220
†*C2060010	12	13/16	4	15°	1669
C2060011	15	13/16	4	15°	2066

**These brackets have 13/16" stringing block holes.*

†RUS listed

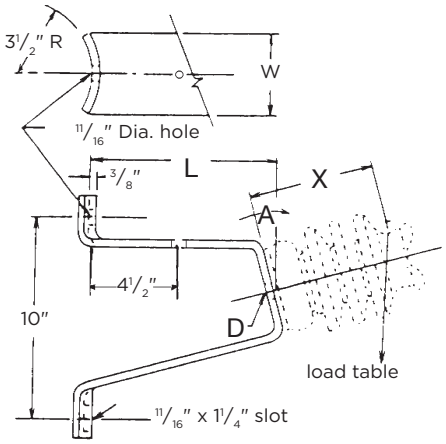

C2060009

Pole Top Insulator Bracket

Post Insulator Side Mounted Brackets

The bracket is formed from high-quality 3/8" x 2-1/2" bar steel and hot dip galvanized. It can be utilized to mount distribution post insulators from 15 kV to 34.5 kV.

Catalog No.		Pole Mounting Bolts Required	Insulator Stud Bolts Required	Approx. Ship Wt. Lbs per 100 pcs.
13/16" Hole	11/16" Hole			
†*C2060209	16919	Two 5/8"	3/4"	650
C2060162	-	Two 5/8"	3/4"	440

**This bracket is designed to facilitate a stringing block.*

†RUS listed

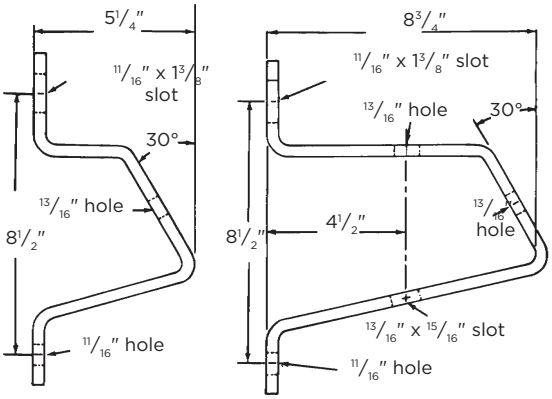

C2060162 C2060209

Post Insulator Uni-Brackets

Chance Uni-Brackets are a clean-appearing, low-cost method of mounting three post-type insulators atop a pole completely eliminating the crossarm. The brackets can be installed on the pole in less than five minutes, requiring only two 3/4" bolts for attachment. Uni-Brackets fit poles having a pole-top diameter from 6" to 8-1/2". Slot on top is 11/16" x 2-1/4".

No. 9183 brackets can be adapted to a variety of distribution construction using post-type insulators from 15kV through 34.5 kV.

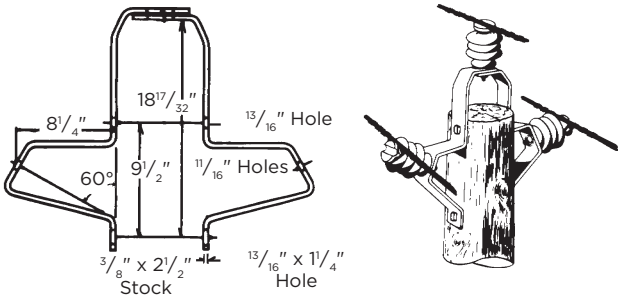

No. 9183

Catalog No.	Insulator Stud Bolts Required	Approx. Ship Wt. Lbs per 100 pcs.
†9183	5/8"	2100

†Includes both sections of bracket

Notes

Notes

HUBBELL
Power Systems

Hubbell Power Systems, Inc. (HPS) manufactures a wide variety of transmission, distribution, substation, OEM and telecommunications products used by utilities.

GET IN TOUCH:

hpscs@hubbell.com

(573) 682-5521

www.hubbell.com/hubbellpowersystems

Hubbell Power Systems
210 N. Allen
Centralia, MO 65240

©2025 Hubbell Power Systems. All rights reserved.
Hubbell and the Hubbell logo are registered trademarks or trademarks of Hubbell Incorporated. All other trademarks are the property of their respective owners.
AIK-HPS-CAT-EN-03098_2 | 04/2025

A Hubbell brand